Moxa Industrial Secure Router CLI Command Set User Manual

Version 3.0, August 2023

www.moxa.com/products

© 2023 Moxa Inc. All rights reserved.

Moxa Industrial Secure Router CLI Command Set User Manual

The software described in this manual is furnished under a license agreement and may be used only in accordance with the terms of that agreement.

Copyright Notice

© 2023 Moxa Inc. All rights reserved.

Trademarks

The MOXA logo is a registered trademark of Moxa Inc.
All other trademarks or registered marks in this manual belong to their respective manufacturers.

Disclaimer

- Information in this document is subject to change without notice and does not represent a commitment on the part of Moxa.
- Moxa provides this document as is, without warranty of any kind, either expressed or implied, including, but not limited to, its particular purpose. Moxa reserves the right to make improvements and/or changes to this manual, or to the products and/or the programs described in this manual, at any time.
- Information provided in this manual is intended to be accurate and reliable. However, Moxa assumes no responsibility for its use, or for any infringements on the rights of third parties that may result from its use.
- This product might include unintentional technical or typographical errors. Changes are periodically made to the information herein to correct such errors, and these changes are incorporated into new editions of the publication.

Technical Support Contact Information

www.moxa.com/support

Table of Contents

1. Overview 4
Command Modes 4
Command Sets 6
System 6
Security 40
Diagnostics 54
Network Services 75
2. Interface and Routing Functions 93
Command Modes 93
Command Sets 94
Interfaces 94
Routing 119
3. NAT, VPN, and Firewall Functions 140
Command Modes 140
Command Sets 141
Network Address Translation 141
Firewall 157
Virtual Private Network (VPN) 172
4. Layer 2 Functions 184
Command Modes 184
Command Sets 185
Port 185
Network Redundancy 202
Virtual LAN 210
Multicast 213
QoS and Rate Control 216
5. Supplementary Information 224

1. Overview

This chapter describes the commands of the system functions for Moxa industrial secure routers.

The following table describes the notation used to indicate command-line syntax in this document:

Notation	Description
Bold **Text** without brackets	Required items. You must type as shown
[Text inside square brackets]	Optional items.
{Text inside braces}	Set of required items. You must choose one.
<Text inside angle brackets>	Placeholder for which you must supply a value.
Vertical bar |	Also known as pipe, separator for mutually exclusive items. You must choose one.
Ellipsis …	String items can be separated by a whitespace and repeated multiple times.

Command Modes

Refer to the following tables for the command mode descriptions.

Mode	Access Method	Prompt	Exit Method	About This Mode
User EXEC	Begin a session with your router by using a normal user account and password.	#	Enter **exit** or **quit**.	Use this mode to • Change terminal settings. • Perform basic tests. • Display system information.
Privileged EXEC	Begin a session with your router by using an admin type user account and password.	#	Enter **exit** or **quit**.	Use this mode to • Change terminal settings. • Perform basic tests. • Display system information. • Enter configuration mode.
Global configuration	While in privileged EXEC mode, enter the **configure** command.	(config)#	To exit to privileged EXEC mode, enter **exit**.	First level to configure main router functions.
Sub-level configuration	While in global configuration mode, use for example **ip dhcp pool <index>** command and press enter	(dhcp-config)#	To exit to global configuration mode, enter **exit**.	A sub-level to configure for example DHCP related arguments.

Tips:

1. Moxa's CLI supports command line tab completion. Type a few characters of a command and press the TAB key. Available commands will show in the console.
2. Moxa's CLI support a hot-key '?' to list an available command list under a specific command mode; or list available command parameters followed by a specific command.

Examples

Example 1: List a command list (note that '?' will not be displayed on the console)

```
router# ?
  quit                    - Exit Command Line Interface
  exit                    - Exit Command Line Interface
  reload                  - Halt and Perform a Cold Restart
  terminal                - Configure Terminal Page Length
  copy                    - Import or Export File
  config-file             - configuration file
  no                      - Negate a command or set its defaults
  save                    - Save Running Configuration to Local Storage
  ping                    - Send Echo Messages
  tcpdump                 - Dump traffic on a network
  clear                   - Clear Information
  show                    - Show System Information
  configure               - Enter Configuration Mode
  sslcertgen              - Generate SSL certificate.
  sshkeygen               - Generate SSH host key.
router#
```

Example 2: List command parameters (note that '?' will not be displayed on the console)

```
router(config)# snmp-server ?
  location                - Router Location
  description             - Router Description
  contact                 - Router Maintainer Contact Information
  community               - SNMP Community Setting
  version                 - SNMP Version Setting
  user                    - SNMP User Setting
  host                    - Hosts to Receive SNMP Notifications
  trap-mode               - SNMP Trap/Inform mode setting
router(config)#
```

Command Sets

System

Restart and Reload Factory Default

reload

Use the **reload** privileged command on the router to restart Moxa Router. Use the reload **factory-default** privileged command to restore the router configuration to the factory default values.

Synopsis

 # reload [**factory-default** [**no cert**]]

Option Description	reload	Halt and perform a warm restart
	factory-default	Halt and perform a warm restart with factory default settings
	no cert	By default, when resetting to factory default the device keeps the certificate configuration. Use this parameter if you want to remove any installed "Certificate Management" and "Authentication Certificate" configuration
Defaults	N/A	
Command Modes	Privileged EXEC	
Usage Guidelines	Warming: After factory default, previous settings cannot be recovered. To avoid this situation, you should export the current configuration file before proceeding.	

Examples	• Reload factory default settings and keep existing certificates.
	`router# reload factory-default`
	`Proceed with reload to factory default? [Y/n]`
	• Reload factory default settings and remove existing certificates.
	`router# reload factory-default no cert`
	`Proceed with reload to factory default? [Y/n]`
	• Restart Moxa Router
	`router# reload`
	`Proceed with reload ? [Y/n]`	

Error Messages	N/A	
Related Commands	N/A	

Information Settings

hostname

To specify or modify the system name of the device, use the **hostname** global configuration command. To return to the default, use the **no** form of this command.

Synopsis

(config)# **hostname** <token …>

(config)# **no hostname**

Option Description	token	A set of characters without a whitespace.
Defaults	The default text is: "Firewall/VPN Router [6 last digits of serial number]"	
Command Modes	Global configuration	
Usage Guidelines	• 5 tokens are allowed to specify the router's name. • Maximum number of characters including whitespaces is 30.	

Examples	• Specify/modify the system name to "MOXA Ethernet Router TN-4908"
	`router# configure`
	`router(config)# hostname MOXA Ethernet Router TN-4908`
	`router(config)# exit`
	• Resetting router's name to default settings.
	`router# configure`
	`router(config)# no hostname`
	`router(config)# exit`	

Error Messages	Length of router hostname is too long	
	^Parse error	
Related Commands	show system	

snmp-server contact

To set the system Maintainer Information, use the **snmp-server contact** global configuration command. To remove the contact string, use the no form of this command.

Synopsis

(config)# **snmp-server contact** <token …>

(config)# **no snmp-server contact**

Option Description	token	A set of characters without a whitespace.
Defaults	Empty string	
Command Modes	Global configuration	
Usage Guidelines	• Maximum 5 tokens are allowed to specify the router maintainer contact information. • Maximum number of characters including whitespaces is 30.	

Examples	• Specify/modify the maintainer contact info to "Green line Bob"
	`router# configure`
	`router(config)# snmp-server contact Green line Bob`
	`router(config)# exit`
	• Resetting contact info to default settings.
	`router# configure`
	`router(config)# no snmp-server contact`
	`router(config)# exit`	

Error Messages	Length of maintainer info is too long	
	^Parse error	
	^Incomplete command	
Related Commands	show system	

snmp-server description

To set the system description, use the **snmp-server description** global configuration command. To remove the description string, use the **no** form of this command.

Synopsis

(config)# **snmp-server description** <token …>

(config)# **no snmp-server description**

Option Description	token	A set of characters without a whitespace.
Defaults	Empty string	
Command Modes	Global configuration	
Usage Guidelines	• Maximum 5 tokens are allowed to specify the system maintainer contact information. • Maximum number of characters including whitespaces is 30.	

Examples	• Specify/modify the system description to "Moxa TN router"
	`router# configure`
	`router(config)# snmp-server description Moxa TN router`
	`router(config)# exit`
	• Resetting system description to default settings.
	`router# configure`
	`router(config)# no snmp-server description`
	`router(config)# exit`	

Error Messages	Length of system description is too long	
	^Parse error	
	^Incomplete command	
Related Commands	show system	

snmp-server location

To set the system location, use the **snmp-server location** global configuration command. To remove the location string, use the **no** form of this command.

Synopsis

(config)# **snmp-server location** <token …>

(config)# **no snmp-server location**

Option Description	token	A set of characters without a whitespace. Valid format must be a-z, A-Z, 0-9 or . , - _ @ ! # $ % ^ & * ( ) /
Defaults	The default text is "Device Location".	
Command Modes	Global configuration	
Usage Guidelines	• Maximum 5 tokens are allowed to specify the location of the device. • Maximum number of characters including whitespaces is 80.	

Examples	• Specify/modify the location of the device to "Consist 1"
	`router# configure`
	`router(config)# snmp-server location Consist 1`
	`router(config)# exit`
	• Resetting device location to default settings.
	`router# configure`
	`router(config)# no snmp-server location`
	`router(config)# exit`	

Error Messages	Length of location is too long	
	% Not in correct format	
	^Parse error	
	^Incomplete command	
Related Commands	show system	

show system

Use **show system** command to display system identification settings.

Synopsis

show system

Option Description	system	System hardware and software status
Defaults	N/A	
Command Modes	Privileged EXEC / User EXEC	
Usage Guidelines	N/A	
Examples	router# show system System Information System Name : MOXA Ethernet Router TN-4908 System Location : Xidian No. 135 6F Taiwan System Description : MOXA TN router Maintainer Information : 8860289191230 MAC Address : 00:90:E8:49:08:12 Serial No. : MOXA00000000 System Uptime : 2d0h9m43s CPU Frequency : 1600 MHz	
Error messages	^Parse error	
	^Incomplete command	
Related Commands	hostname snmp-server description snmp-server contact snmp-server location	

show version

Use **show version** command to display the model name and system firmware version.

Synopsis

show version

Option Description	version	Display model name and firmware version
Defaults	N/A	
Command Modes	Privileged EXEC / User EXEC	
Usage Guidelines	Model Name: Display the standard model name of the device. Firmware version: Display the current installed firmware version on the device.	
Examples	router# show version Model Name : TN-4908-8GTX-WV-T Firmware Version : V1.2 build 22092619	
Error messages	^Parse error	
	^Incomplete command	
Related Commands	N/A	

Firmware Upgrade

copy

To upgrade a firmware image to the Flash memory, use the **copy** privileged command on the router to select a remote server through TFTP, SFTP or SCP.

Synopsis

copy {{**scp** | **sftp**} <account> <password> <ip> **device-firmware** <filename> |
tftp <ip> **device-firmware** <filename>}

Option Description	scp	Specifies to download a file through SCP file server
	sftp	Specifies to download a file through SFTP file server
	account	Specifies the user's name to login remote SCP or SFTP file server
	password	Specifies the password for authentication.
	device-firmware	Specifies the firmware image
	ip	IP address of the file server
	filename	File name of the firmware image
	tftp	Specifies to download a file through TFTP
Defaults	N/A	
Command Modes	Privileged EXEC	
Usage Guidelines	• The system will reboot automatically, whether the command succeeds or not. • Hardware interface has to be enabled before selecting USB storage device.	

Examples	Upgrade firmware from a remote SCP server.
	`router# copy scp moxa moxa 192.168.127.102 device-firmware FWR_TN-4900_V3.0_Build_23072200.rom`
	`SCP Server IP: 192.168.127.102`
	`Imported Firmware: FWR_TN-4900_V3.0_Build_23072200.rom`
	`Firmware transfering...`
	`Initial checking, please wait.`
	`Verified OK`
	`buildinPkg/`
	`buildinPkg/Zeus/`
	`buildinPkg/Zeus/MXSecurity_TN-4900_V2.0.12_Build_23072113.pkg`
	`buildinPkg/Janus/`
	`buildinPkg/Janus/Security_TN-4900_V7.0.9_Build_23071914.pkg`
	`Checking transfer:Firmware Upgrade OK! Restart the device.`	

Error Messages	Input error	
	No USB Device	
	Invalid parameter!	
	% Configuration Upload Fail!	
	% Config file import failed.	
	^Parse error	
	^Incomplete command	
Related Commands	show version auto-backup enable	

Configuration Backup and Restore

copy running-config

Use the **copy** privileged command on the router to backup or restore a configuration file to/from either a USB storage device (e.g., ABC-02) or a remote file server.

Synopsis

Backup configuration file:

copy running-config {**tftp** <ip> <cfg-path-name> |
usb |
{**scp** | **sftp**} <account> <password> <ip> <cfg-path-name>}

Restore configuration file:

copy { **tftp** <ip> **config-file** <cfg-path-name> |
usb <filename> |
{**scp** | **sftp**} <account> <password> <ip> **config-file** <cfg-path-name>}

Option Description	running-config	Specifies to export current running configuration to usb or remote file server
	usb	Specifies local USB storage device
	tftp	Specifies to upload/download configuration file through TFTP file server
	ip	IP address of the file server
	cfg-path-name	Configuration file path name on remote server
	scp	Specifies to upload/download a file through SCP file server
	sftp	Specifies to upload/download a file through SFTP file server
	account	Specifies the user's name to login remote SCP or SFTP file server
	password	Specifies the password for authentication.
	filename	Configuration file name.
	config-file	Specifies to import configuration
Defaults	N/A	
Command Modes	Privileged EXEC	
Usage Guidelines	• After importing configuration file successfully, console terminal will restart automatically. • After exporting configuration file successfully, existing configuration file on USB will be replaced. • Default configuration file name after export is Sys.ini. • CLI treats the configuration file name as case-insensitive. • Hardware interface has to be enabled before selecting USB storage device.	

Examples	• Backup current configuration file to a remote TFTP server.
	`router# copy running-config tftp 192.168.127.102 sys_tftp.ini`
	`TFTP Server IP: 192.168.127.102`
	`Exported Config File: sys_tftp.ini`
	`Config File is exporting now, please wait.`
	`Configuration Upload Success!`
	`router#`
	• Restore configuration from a remote SCP server.
	`router# copy scp moxa moxa 192.168.127.102 config-file sys_scp.ini`
	`SCP Server IP: 192.168.127.102`
	`Imported Config File: sys_scp.ini`
	`Config File is importing now, please wait.`
	`Config file import successfully.`	

Error Messages	Input error	
	No USB Device	
	Invalid parameter!	
	% Configuration Upload Fail!	
	% Config file import failed.	
	^Parse error	
	^Incomplete command	
Related Commands	show running-config auto-backup enable	

config-file

Use the **config-file** privileged command to configure encryption settings in the text-based config file. Use **no config-file digital-signature** command to disable Digital Signature option.

Synopsis

config-file {**digital-signature** |
data-encryption {**sensitive** |
all} |
encryption-password <key-string>}

no config-file digital-signature

Option Description	digital-signature	Enables / disables digital signature on the configuration file.
	data-encryption	Specifies to encrypt sensitive information (aka password) or all information in the configuration file.
	sensitive	Only sensitive information will be encrypted.
	all	All information will be encrypted.
	encryption-password	Encrypts sensitive passwords including: 1. 802.1X Server Key 2. 802.1X Local Database Account Password 3. DDNS password 4. PPTP Password 5. PPPoE password 6. IPSEC Pre-Shared Key 7. OSPF Auth key 8. OSPF MD5 Key 9. SNMP data encryption key 10. SMTP password
	key-string	An encryption key string. Maximum string length is 30. Whitespaces are not allowed.
Defaults	Disabled.	
Command Modes	Privileged EXEC	
Usage Guidelines	• This CLI command shall not be exported nor imported via a configuration file. • Users need to change "Digital Signature" / "Data Encryption" / "Encryption Password" via Web UI or CLI before importing a new configuration file if one of those settings are different than default ones.	

Examples	• Enable Digital Signature.
	`router# config-file digital-signature`
	• Change Encryption Key to **moxa1234**.
	`router# config-file encryption-password moxa1234`	

Error Messages	Password Length should be less than 30	
	^Parse error	
	^Incomplete command	
Related Commands	N/A	

save config

Use the **save config** privileged command on the router to save running configuration to the local flash memory storage.

Synopsis

save config

Option Description	config	A running configuration.
Defaults	N/A	
Command Modes	Privileged EXEC	
Usage Guidelines	To guarantee the retention of all newly configured settings on the local flash memory, execute this command once all configurations are completed.	
Examples	N/A	
Error Messages	^Parse error	
	^Incomplete command	
Related Commands	show running-config	

auto-backup config

Use the **auto-backup** global configuration commands on the router to enable auto-backup configurations to the local storage. Use the **no** form of this command to disable auto-backup function.

Synopsis

(config)# **auto-backup** {**enable** |
auto-load config|
config}

(config)# **no auto-backup** {**enable** |
auto-load |
config}

Option Description	enable	Specifies to enable hardware interface (USB) to allow the router to import configuration files or export configuration file.
	auto-load config	Specifies to enable auto-load configurations from the ABC-02 on every bootup.
	config	Specifies to automatically backup configuration to ABC-02 whenever changes are made to settings.
Defaults	N/A	
Command Modes	Global configuration	
Usage Guidelines	• A local storage (ABC-02) has to be plugged in advance. • Hardware interface (USB) has to be enabled in advance.	

Examples	• Enable auto-backup to import configuration file from the USB storage device.
	`router# configure`
	`router(config)# auto-backup enable`
	`router(config)# auto-backup auto-load config`
	`router(config)# exit`
	• Disable auto-backup to import configuration file from the USB storage device.
	`router# configure`
	`router(config)# no auto-backup auto-load config`
	`router(config)# no auto-backup enable`
	`router(config)# exit`	

Error Messages	^Parse error	
	^Incomplete command	
Related Commands	show auto-backup auto-backup event-log	

config-fwr-ver-check

Use the **config-fwr-ver-check** privileged command on the router to enable firmware version checking in the configuration file. Use the **no** form of this command to disable firmware version checking.

Synopsis

(config)# **config-fwr-ver-check**

(config)# **no config-fwr-ver-check**

Option Description	config-fwr-ver-check	Enables / disables firmware version checking feature.
Defaults	N/A	
Command Modes	Privileged EXEC	
Usage Guidelines	Upon activation of this feature, the configuration file will undergo firmware version checking. If the version number in the file is higher than the current version, restoration will be halted.	
Examples	N/A	
Error Messages	^Parse error	
	^Incomplete command	
Related Commands	N/A	

show auto-backup

Use **show auto-backup** command to display system settings of auto-backup.

Synopsis

show auto-backup

Option Description	auto-backup	Display system auto-backup settings
Defaults	N/A	
Command Modes	Privileged EXEC / User EXEC	
Usage Guidelines	N/A	

Examples	`router# show auto-backup`
	`auto-backup stat : Enable`
	`auto-backup auto-load config : Disable`
	`auto-backup event-log : Enable`
	`auto-backup config : Enable`	

Error messages	^Parse error	
	^Incomplete command	
Related Commands	auto-backup	

show running-config

Use the **show running-config** command to display the settings of the current system.

Synopsis

show running-config

Option Description	running-config	Specifies the settings on current system.
Defaults	N/A	
Command Modes	Privileged EXEC /User EXEC	
Usage Guidelines	N/A	
Examples	router# show running-config ! ---------- TN-4908-8GTX-WV-T---------- router ospf 192.168.1.1 area 192.168.1.1 area 192.168.1.2 stub metric 999 area 192.168.3.254 area 192.168.1.1 virtual-link 192.168.1.11 area 192.168.1.1 range 192.168.3.0 255.255.255.0 vlan create 1 vlan create 2 vlan create 3 vlan create 6 vlan create 4040 vlan create 4041 interface ethernet 1/1 no shutdown speed-duplex Auto no flowcontrol media cable-mode auto switchport access vlan 6 interface ethernet 1/2 … (omit the rest information)	
Error Messages	^Parse error	
	^Incomplete command	
Related Commands	copy config-file save config	

User Account

username

To specify or modify the user's name for local login, use the **username** global configuration command. To delete the user, use the **no** form of this command.

Synopsis

(config)# **username** <name> {**password** <pwd-string> [**privilege** <privilege-level>] |
privilege <privilege-level>}

(config)# **no username** <name>

Option Description	Name	Set of characters without a whitespace. This field is case-sensitive.
	password	Set a password for a new user or modify password for an existing user.
	pwd-string	Specifies a new password string
	privilege	Specifies user's privilege
	privilege-level	Specifies an integer: {system admin(1) | configuration admin(2) | user(3) | no login(4)} Use no login (4) to deactivate the user.
Defaults	user: admin pass: moxa privilege: 1 (admin) user: user pass: moxa privilege: 3 (user) user: configadmin pass: moxa privilege 2 (configuration admin)	
Command Modes	Global configuration	
Usage Guidelines	• <name> Max number of characters is 30. • <pwd-string> by default Min number of characters is 4 and Max number of characters is 16. and no rule for password creation is set. • The current logged user cannot be deleted or have privilege changed.	

Examples	• Add a new user with configuration admin privilege.
	`router# configure`
	`router(config)# username test password test1234 privilege 2`
	`router(config)# exit`
	• Delete an existing user
	`router# configure`
	`router(config)# no username test`
	`router(config)# exit`
	• Modify existing user password.
	`router# configure`
	`router(config)# username test password abc1234`
	`router(config)# exit`
	• Modify existing user privilege
	`router# configure`
	`router(config)# username test privilege 1`
	`router(config)# exit`
	• Deactive an existing user
	`router# configure`
	`router(config)# username test privilege 4`
	`router(config)# exit`	

Error Messages	% Privilege should be between 1 and 4	
	% Invalid password length	
	% The username is not available	
	% Delete login user is error operation	
	% Disable login user is error operation	
	% "admin" only to admin authority, and "user" only to user authority	
	^Parse error	
	^Incomplete command	
Related Commands	show users password policy	

show users

Use **show users** command to display system users information.

Synopsis

show users

Option Description	users	Display Login account information
Defaults	N/A	
Command Modes	Privileged EXEC / User EXEC	
Usage Guidelines	N/A	
Examples	router# show users Login account information: Name Authority ---------- ---------- admin System admin configadmin Configuration admin user user test System admin	
Error messages	^Parse error	
	^Incomplete command	
Related Commands	username	

Password Policy

password-policy

To specify or modify the password policy for the login users, use the **password-policy** global configuration command. To return to the default, use the **no** form of this command.

Synopsis

(config)# **password-policy** {**minimum-length** <length>|
complexity-check [{**digit** |
alphabet |
special-characters}]}

(config)# **no password-policy** {**minimum-length** |
complexity-check [{**digit** |
alphabet |
special-characters}]}

Option Description	minimum-length	Specifies the minimum character length of user passwords.
	length	Ranges from 4 to 16.
	complexity-check	Enables additional complexity requirements for password
	digit	Enables/disables password strength check: digit
	alphabet	Enables/disables password strength check: alphabet
	special-characters	Enables/disables password strength check: special characters
Defaults	By default no password rules are set	
Command Modes	Global configuration	
Usage Guidelines	After enable password policy, existing passwords will not be affected and need to be changed manually or forced to change by next login to meet the new policy.	

Examples	• Set password minimum length to 8
	`router# configure`
	`router(config)# password-policy minimum-length 8`
	`router(config)# exit`
	• Revoking password minimum length
	`router# configure`
	`router(config)# no password-policy minimum-length`
	`router(config)# exit`
	• Set password complexity.
	`router# configure`
	`router(config)# password-policy complexity-check digit`
	`router(config)# password-policy complexity-check alphabet`
	`router(config)# password-policy complexity-check special-characters`
	`router(config)# exit`
	• Revoking password complexity
	`router# configure`
	`router(config)# no password-policy complexity-check`
	`router(config)# exit`	

Error Messages	% Password minimum length should between 4~16	
	^Parse error	
	^Incomplete command	
Related Commands	show running-configuration	

User Interface

ip http-server

Use the **ip http-server** global configuration commands on the router to enable the HTTP/HTTPs service. Use the **no** form of this command to disable the HTTP/HTTPS service.

Synopsis

(config)# **ip http-server** [{**secure** [**port** <sec-port>] |
port <port-number> |
max-login-users <number>}]

(config)# **no ip http-server** [{**secure** |
max-login-users}]

Option Description	http-server	Enables http-server service
	secure	Specifies HTTPS support only
	port	Specifies HTTP or HTTPS port number
	sec-port	HTTPS listening port number, valid ranges are 443, 1024 to 65535
	port-number	HTTP listening port number, valid ranges are 80, 1024 to 65535
	max-login-users	Specifies maximum number of concurrent login users
	number	Number of users
Defaults	HTTP service is enabled.	
Command Modes	Global configuration	
Usage Guidelines	Maximum number of concurrent login users for HTTP+HTTPS is 10.	

Examples	Enable HTTPS support and set port number to 404.
	`router# configure`
	`router(config)# ip http-server secure`
	`router(config)# ip http-server secure port 404`
	`router(config)# exit`	

Error Messages	% Https port is invaild, the interval is from 1 to 65535.	
	Maximum Login Users For HTTP+HTTPS should be in range of 1 to 10	
	^Parse error	
	^Incomplete command	
Related Commands	show ip http-server	

ip telnet

To enable telnet service on the router, use the **ip telnet** global configuration command. To disable telnet service, use the **no** form of this command.

Synopsis

(config)# **ip telnet** [**port** <port-number> |
max-login-users <number>]

(config)# **no ip telnet** [**max-login-users**]

Option Description	telnet	Enables telnet service
	port	Specifies telnet port number
	port-number	Server listening port number. Valid ranges are 23, 1024 to 65535
	max-login-users	Specifies maximum number of concurrent login users
	number	Number of users
Defaults	Telnet service is enabled.	
Command Modes	Global configuration	
Usage Guidelines	• Valid port number ranges from 1 to 65535. Please make sure other services do not use the same port in advance. • Maximum number of concurrent login users for telnet+SSH is 10.	

Examples	Enable telnet support and set port number to 8080.
	`router# configure`
	`router(config)# ip telnet port 8080`
	`router(config)# ip telnet`
	`router(config)# exit`	

Error Messages	Maximum Login Users For TELNET+SSH % should be in range of 1 to 10.	
	^Parse error	
	^Incomplete command	
Related Commands	show ip telnet	

ip ssh

To enable ssh service on the router, use the **ip ssh** global configuration command. To disable ssh service, use the **no** form of this command.

Synopsis

(config)# **ip ssh** [**port** <port-number>]
(config)# **no ip ssh**

Option Description	ssh	Enables ssh service
	port	Specifies ssh port number
	port-number	Server listening port number. Valid ranges are 22, 1024 to 65535
Defaults	SSH service is enabled.	
Command Modes	Global configuration	
Usage Guidelines	• Valid port number ranges from 1 to 65535. Please make sure other services do not use the same port in advance. • Maximum number of concurrent login users for telnet+SSH is 10.	

Examples	Enable ssh support and set port number to 4040.
	`router# configure`
	`router(config)# ip ssh port 4040`
	`router(config)# ip ssh`
	`router(config)# exit`	

Error Messages	% SSH port xxx is invaild, the interval is from 1 to 65535.	
	% Assign duplicated port number is not allowed	
	^Parse error	
	^Incomplete command	
Related Commands	show ip telnet	

ip ping-response

When the WAN connection has been established, if the WAN port is pinged it will send a response, use the **ip ping-response** global configuration command. To disable this feature, use the **no** form of this command.

Synopsis

(config)# **ip ping-response**

(config)# **no ip ping-response**

Option Description	ping-response	Enables ping-response.
Defaults	Ping-response is disabled.	
Command Modes	Global configuration	
Usage Guidelines	To ping WAN port successfully, please make sure and ping sender IP is in "Trusted Access" list or "Accept all connection from LAN port" in Trusted Access is enabled.	

Examples	Enable "Ping Response(WAN)" feature.
	`router# configure`
	`router(config)# ip ping-response`
	`router(config)# exit`	

Error Messages	^Parse error	
	^Incomplete command	
Related Commands	N/A	

moxa-utility

To enable Moxa Utility on the router, use the **moxa-utility** global configuration command. To disable Moxa Utility, use the **no** form of this command.

Synopsis

(config)# **moxa-utility**

(config)# **no moxa-utility**

Option Description	N/A	N/A
Defaults	Enabled	
Command Modes	Global configuration	
Usage Guidelines	N/A	
Examples	N/A	
Error Messages	^Parse error	
	^Incomplete command	
Related Commands	show moxa-utility	

show ip http-server

To check the HTTP server settings on the router, use the **show ip http-server** command.

Synopsis

show ip http-server

Option Description	ip http-server	Specifies to display HTTP server information
Defaults	N/A	
Command Modes	Privileged EXEC / User EXEC	
Usage Guidelines	N/A	

Examples	`router# show ip http-server`
	`HTTP service is enable`
	`  HTTP server capability : Present. Port:80`
	`  HTTPS secure server capability : Present. Port:443`
	`  Auto-logout : disable`
	`  Maximum Login Users For HTTP+HTTPS : 5`	

Error Messages	^Parse error	
	^Incomplete command	
Related Commands	ip http-server	

show ip telnet

To check the status of telnet as well as ssh on the router, use the **show ip telnet** command.

Synopsis

show ip telnet

Option Description	ip telnet	Specifies to display telnet and ssh server information
Defaults	N/A	
Command Modes	Privileged EXEC / User EXEC	
Usage Guidelines	N/A	

Examples	`router# show ip telnet`
	`  Telnet capability : Present. Port:23`
	`  SSH capability : Present. Port:22`
	`  Maximum Login Users For Telnet+SSH : 5`	

Error Messages	^Parse error	
	^Incomplete command	
Related Commands	ip telnet	

show moxa-utility

To check the status of Moxa's utility on the router, use the **show moxa-utility** command.

Synopsis

show moxa-utility

Option Description	moxa-utility	Specifies to display Moxa's utility information
Defaults	N/A	
Command Modes	Privileged EXEC / User EXEC	
Usage Guidelines	N/A	
Examples	`router# show moxa-utility` `  MOXA Utility capability : Present. Port: 4000,4001`	
Error Messages	^Parse error	
	^Incomplete command	
Related Commands	moxa-utility	

SNMP

snmp-server version

To enable/disable the Simple Network Management Protocol (SNMP) server and configure the SNMP version, use the **snmp-server version** global configuration command.

Synopsis

(**config**)# **snmp-server version** {**v1-v2c-v3** |
v1-v2c |
v3 |
disable}

Option Description	v1-v2c-v3	Version 1, 2C and 3 support
	v1-v2c	Version 1 and 2C support
	v3	Only version 3 support
	disable	Disable SNMP service
Defaults	Default version is v1-v2c	
Command Modes	Global configuration	
Usage Guidelines	N/A	

Examples	Specify/modify SNMP version to v3 support.
	`router# configure`
	`router(config)# snmp-server version v3`
	`router(config)# exit`	

Error Messages	^Parse error	
	^Incomplete command	
Related Commands	snmp-server community snmp-server user snmp-server host snmp-server trap-mode snmp-server engineid show snmp	

snmp-server community

To set up the community access string to permit access to the SNMP, use the **snmp-server community** global configuration command.

Synopsis

(config)# **snmp-server community** <index> <community> {**ro** |
rw |
no-access}

Option Description	index	First or second community: 1 or 2
	community	SNMP community string
	ro	Access mode: read-only
	rw	Access mode: read-write
	no-access	Access mode: no-access
Defaults	Public community is ro Private community is rw	
Command Modes	Global configuration	
Usage Guidelines	• Specifies read-only access. Authorized management stations are only able to retrieve MIB objects. • Specifies read-write access. Authorized management stations are able to both retrieve and modify MIB objects	

Examples	Specify/modify rouser as read-only community string.
	`router# configure`
	`router(config)# snmp-server 1 rouser ro`
	`router(config)# exit`	

Error Messages	% Index must be 1 - 2.	
	Access mode must be rw, ro or no-access.	
	% is over length. It must be 1 - 30.	
	^Parse error	
	^Incomplete command	
Related Commands	snmp-server version snmp-server user snmp-server host snmp-server trap-mode snmp-server engineid show snmp	

snmp-server user

In the SNMPv3 application, to configure a user's authentication type and password, use the **snmp-server user** global configuration command.

Synopsis

(config)# **snmp-server user** {**admin** | **user**} **auth** {**no-auth** |
md5 |
sha} [**priv** {**des** | **aes**} <password>]

Option Description	admin	System admin group for authentication
	user	User group for authentication
	auth	Specifies which authentication type should be used
	no-auth	Authentication type: no-auth
	md5	Authentication type: MD5
	sha	Authentication type: SHA
	priv	Specifies which encryption algorithm should be used
	des	Encryption algorithm: DES
	aes	Encryption algorithm: AES
	password	Data encryption key (maximum 30 characters)
Defaults	N/A	
Command Modes	Global configuration	
Usage Guidelines	Length of password must be at least 8 bytes.	

Examples	• Specify/modify data encryption (DES) key to moxamoxa for admin user-group.
	`router# configure`
	`router(config)# snmp-server user admin auth md5 priv des moxamoxa`
	`router(config)# exit`
	• Specify/modify authentication type to sha without altering priv and password arguments.
	`router# configure`
	`router(config)# snmp-server user admin auth sha`
	`router(config)# exit`	

Error Messages	% SNMP user must be (admin | user)!!	
	% SNMP authtype must be (no-auth | md5 | sha)!!	
	% Data Encryption must be at least 8 bytes !!!	
	^Parse error	
	^Incomplete command	
Related Commands	snmp-server community snmp-server version snmp-server host snmp-server trap-mode snmp-server engineid show snmp	

snmp-server engineid

To enable and configure user-defined SNMP engine ID, use the **snmp-server engineid** global configuration command. To disable and clear user-defined SNMP engine ID, use **no** form of this command.

Synopsis

(config)# **snmp-server engineid** <hex-string>

(config)# **no snmp-server engineid**

Option Description	hex-string	Specifies the hexadecimal string of user-defined engine ID. The length of this hexadecimal string is expected from 2 to 54.
Defaults	Disabled	
Command Modes	Global configuration	
Usage Guidelines	• The length of the hexadecimal string is required to be an even number. • The <hex-string> must use combination of letters from 0-9, a-f, A-F. • The <hex-string> must contain a prefix string **800021f305**. • In order to use this command, SNMP version is required to be configured as either v1-v2c-v3 or v3. • It is required to re-apply or change the password for every user again to let user-defined Engine ID take effect.	

Examples	Specify a user-defined engine ID 0x800021f3051234.
	`router# configure`
	`router(config)# snmp-server version v1-v2c-v3`
	`router(config)# snmp-server engineid 800021f3051234`
	`router(config)# exit`	

Error Messages	% Invalid Engine ID : prefix should be 800021f305	
	% The hexadecimal string format is invalid. Please use combination of letters from 0-9, a-f, A-F.	
	% The length of the hexadecimal string is required to be an even number.	
	^Parse error	
	^Incomplete command	
Related Commands	snmp-server community snmp-server user snmp-server host snmp-server trap-mode snmp-server version show snmp	

show snmp

To check the SNMP server settings on the router, use the **show snmp** command.

Synopsis

show snmp

Option Description	snmp	Specifies to display SNMP server information
Defaults	N/A	
Command Modes	Privileged EXEC / User EXEC	
Usage Guidelines	N/A	
Examples	router# show snmp SNMP Read/Write Settings SNMP Versions : v1-v2c-v3 SNMP Engine ID : 800021f3030090e8a9ed13 First Community : public Second Community : private Admin Auth. Type : md5 Admin Data Encryption Key : Enable ********* User Auth. Type : md5 User Data Encryption Key : Disable Trap Settings Trap Server 1 IP/Name : 9.1.1.1 Trap Server 2 IP/Name : 9.1.1.2 Trap Server 3 IP/Name : 9.1.1.3 Trap Community : public Trap Mode Mode : Trap V3 User : trapv3-user Auth : sha Priv : Enable Private MIB information Switch Object ID : enterprise.8691.6.100	
Error Messages	^Parse error	
	^Incomplete command	
Related Commands	snmp-server version snmp-server community snmp-server user snmp-server host snmp-server trap-mode snmp-server engineid snmp-server trap-v3 snmp-server inform-v3	

Date and Time

clock set

Use the **clock set** global configuration command on the router to set the current time.

Synopsis

(config)# **clock set** <time> <month> <day> <year>

Option Description	clock	Configure time-of-day clock
	set	Adjust the clock
	time	hh:mm:ss
	month	1 ~ 12
	day	1 ~ 31
	year	2000 ~ 2037
Defaults	N/A	
Command Modes	Global configuration	
Usage Guidelines	N/A	

Examples	Set system time to Jan 1, 2022 14:45:30.
	`router# configure`
	`router(config)# clock set 14:45:30 1 1 2022`
	`router(config)# exit`	

Error Messages	Illegal parameters!	
	^Parse error	
	^Incomplete command	
Related Commands	show clock	

clock summer-time

Use the **clock summer-time** global configuration command on the router to enable the day light saving time offset and set the duration. Use the **no** form of this command to disable it.

Synopsis

(config)# **clock summer-time** {**start-date** <month> <week> <day> <hour> <min> |
end-date <month> <week> <day> <hour> <min> |
offset <offset-hour> [<offset-min>]}

(config)# **no clock summer-time**

Option Description	clock	Configure time-of-day clock
	summer-time	Configure Summer time parameter
	start-date	The date when summer time offset start
	end-date	The date when summer time offset end
	month	From 'Jan', 'January' or '1' to 'Dec', 'December', or '12'
	week	From '1st' or '1' to 'Last' or '6'
	day	From 'Sun', 'Sunday' or '1' to 'Sat', 'Saturday' or '7'
	hour	Ranges from 0 to 23
	min	Ranges from 0 to 59
	offset	Summer time offset
	offset-hour	Ranges from 1 to 12
	offset-min	30 to represents half an hour is allowed.
Defaults	N/A	
Command Modes	Global configuration	
Usage Guidelines	When configuring the summer time offset, the start-date and end-date must be configured correctly first.	

Examples	Set daylight saving time : start from March, 2nd week, Sunday, 02:00; end at September 1st week, Sunday, 02:00; offset hour: 2.
	`router# configure`
	`router(config)# clock summer-time start-date 3 2 1 2 0`
	`router(config)# clock summer-time end-date 9 1 1 2 0`
	`router(config)# clock summer-time offset 2`
	`router(config)# exit`	

Error Messages	Invalid parameter	
	Month must be configured as 'Jan', 'January' or a numerical '1'.	
	Week must be configured as '1st', '2nd', '3rd', '4th', '5th' or 'Last'	
	Day must be configured as 'Sun', 'Sunday' or a numerical '1'.	
	Hour must be in the range from 0 to 23.	
	Please input the correct start/end date of the summer time first!	
	Minutes offset is invalid, just only type '30'	
	Hour offset is out of range.	
	^Parse error	
	^Incomplete command	
Related Commands	show clock	

clock timezone

Use the **clock timezone** global configuration command on the router to set the current time zone.

Synopsis

(config)# **clock timezone gmt** <offset-hour> [{<half-hour> |
city <city-name>}]

Option Description	clock	Configure time-of-day clock
	timezone	Time zone hour shifting
	gmt	Greenwich Mean Time
	offset-hour	-12 ~ 12
	half-hour	30 to represents half an hour is allowed
	city	Specifies a city of a timezone
	city-name	Refers to below list to understand available city names correlated to its offset hour:

Offset-hour	city-name	Major Cities in the timezone
-12	Eniwetok	Eniwetok, Kwajalein
-11	Midway-Island	Midway Island , Samoa
-10	Hawaii	Hawaii
-9	Alaska	Alaska
-8	Pacific-Time	Pacific Time (US & Canada), Tijuana
-7	Arizona	Arizona
-7	Mountain-Time	Mountain Time (US & Canada)
-6	Central-Time	Central Time (US & Canada)
-6	Mexico-City	Mexico City, Tegucigalpa
-6	Saskatchewan	Saskatchewan
-5	Bogota	Bogota, Lima, Quito
-5	Eastern-Time	Eastern Time (US & Canada)
-5	Indiana	Indiana (East)
-4	Atlantic-Time	Atlantic Time (Canada)
-4	Caracas	Caracas, La Paz
-4	Santiago	Santiago
-3 30	Newfoundland	Newfoundland
-3	Brasilia	Brasilia
-3	Buenos-Aires	Buenos Aires, Georgetown
-2	Mid-Atlantic	Mid-Atlantic
-1	Azores	Azores, Cape Verde Is.
0	Casablanca	Casablanca, Monrovia
0	Greenwich	Greenwich Mean Time: Dublin, Edinburgh, Lisbon, London
+1	Amsterdam	Amsterdam, Berlin, Bern, Stockholm, Vienna
+1	Belgrade	Belgrade, Bratislava, Budapest, Ljubljana, Prague
+1	Brussels	Brussels, Copenhagen, Madrid, Paris, Vilnius
+1	Sarajevo	Sarajevo, Skopje, Warsaw, Zagreb
+2	Athens	Athens, Istanbul, Minsk
+2	Bucharest	Bucharest
+2	Cairo	Cairo
+2	Harare	Harare, Pretoria
+2	Helsinki	Helsinki, Kyiv, Riga, Sofia, Tallinn
+2	Jerusalem	Jerusalem
+3	Baghdad	Baghdad, Kuwait, Riyadh
+3	Moscow	Moscow, St. Petersburg, Volgograd
+3	Nairobi	Nairobi
+3 30	Tehran	Tehran
+4	Abu-Dhabi	Abu Dhabi, Muscat

		+4	Baku	Baku, Tbilisi
		+4 30	Kabul	Kabul
		+5	Ekaterinburg	Ekaterinburg
		+5	Islamabad	Islamabad, Karachi, Tashkent
		+5 30	Bombay	Bombay, Calcutta, Madras, New Delhi
		+6	Astana	Astana, Almaty, Dhaka
		+6	Colombo	Colombo
		+7	Bangkok	Bangkok, Hanoi, Jakarta
		+8	Beijing	Beijing, Chongqing, Hongkong, Urumqi
		+8	Perth	Perth
		+8	Singapore	Singapore
		+8	Taipei	Taipei
		+9	Osaka	Osaka, Sapporo, Tokyo
		+9	Seoul	Seoul
		+9	Yakutsk	Yakutsk
		+9 30	Adelaide	Adelaide
		+9 30	Darwin	Darwin
		+10	Brisbane	Brisbane
		+10	Canberra	Canberra, Melbourne, Sydney
		+10	Guam	Guam, Port Moresby
		+10	Hobart	Hobart
		+10	Vladivostok	Vladivostok
		+11	Magadan	Magadan, Solomon Is., New Caledonia
		+12	Auckland	Auckland, Wellington
		+12	Fiji	Fiji, Kamchatka, Marshall Is.
Defaults	GMT+8			
Command Modes	Global configuration			
Usage Guidelines	N/A			

Examples	Set system time zone to GMT+01:00 Paris (same timezone as Brussels).
	`router# configure`
	`router(config)# clock timezone gmt 1 city Brussels`
	`router(config)# exit`			

Error Messages	% Hour offset is out of range.			
	% City Name Error - " "			
	^Parse error			
	^Incomplete command			
Related Commands	show clock			

ntp remote-server

Use the **ntp remote-server** global configuration command to enable the NTP or SNTP client function and configure the network direction of the remote NTP server. Use the **no** form of this command to return to the default value.

Synopsis

(config)# **ntp remote-server** <server-addr-1> [<server-addr-2>] [**simple**]

(config)# **no ntp remote-server**

Option Description	ntp	Configure Network Time Protocol
	remote-server	Configure NTP/SNTP server for time query
	server-addr-1	IP address or DNS name
	server-addr-2	IP address or DNS name
	simple	Configure Simple Network Time Protocol instead of Network Time Protocol
Defaults	The default configuration contains one time server "time.nist.gov".	
Command Modes	Global configuration	
Usage Guidelines	For the command: no ntp remote-server After revoking the ntp remote server configuration the previously set server information will be kept on the cache and still showing on the clock output. However the clock source will be set to Local.	

Examples	Set up an NTP server 192.168.1.1 and specify SNTP clock source.
	`router# configure`
	`router(config)# ntp remote-server 192.168.1.1 simple`
	`router(config)# exit`	

Error Messages	^Parse error	
	^Incomplete command	
Related Commands	ntp server ntp remote-server-auth ntp authentication-key show ntp-auth-keys	

ntp server

Use the **ntp server** global configuration command to enable the router as an NTP server. Use the **no** form of this command to return to disable it.

Synopsis

(config)# **ntp server [auth]**

(config)# **no ntp server [auth]**

Option Description	server	Specifies to enable/disable NTP server
	auth	Specifies to enable/disable client authentication
Defaults	Disabled	
Command Modes	Global configuration	
Usage Guidelines	Use CLI command **ntp authentication-key** to create the entry for client's authentication.	

Examples	• Enable NTP server and client authentication.
	`router# configure`
	`router(config)# ntp server`
	`router(config)# ntp server auth`
	`router(config)# exit`
	
	• Disable NTP server.
	`router# configure`
	`router(config)# no ntp server`
	`router(config)# exit`	

Error Messages	^Parse error	
	^Incomplete command	
Related Commands	ntp remote-server ntp remote-server-auth ntp authentication-key show ntp-auth-keys	

ntp remote-server-auth

Use the **ntp remote-server-auth** global configuration command to specify the key ID to the remote NTP server. Use the **no** form of this command to disable NTP authentication.

Synopsis

(config)# **ntp remote-server-auth server** {**1** | **2**} **key** <key-id>

(config)# **no ntp remote-server-auth server** {**1** | **2**}

Option Description	ntp	Configure Network Time Protocol
	remote-server-auth server	Specifies which NTP server to be configured, Server 1 or Server 2.
	key	Specifies authentication key ID
	key-id	Key ID
Defaults	N/A	
Command Modes	Global configuration	
Usage Guidelines	To proceed with this command, you need to create at least one authentication key beforehand.	

Examples	• Specify KeyID(3) to first NTP server.
	`router# configure`
	`router(config)# ntp remote-server-auth server 1 key 3`
	`router(config)# exit`
	• Disable authentication for first NTP server.
	`router# configure`
	`router(config)# no ntp remote-server-auth server 1`
	`router(config)# exit`	

Error Messages	% Invalid Server, should be (1 | 2).	
	% Invalid key ID for the server, should be 1~65535.	
	^Parse error	
	^Incomplete command	
Related Commands	ntp server ntp remote-server ntp authentication-key show ntp-auth-keys	

ntp authentication-key

Use the **ntp authentication-key** global configuration command to create a key ID for remote NTP server authentication. Use the **no** form of this command to delete the key for NTP authentication.

Synopsis

(config)# **ntp authentication-key** <key-id> <key-type> <key>

(config)# **no ntp authentication-key** <key-id>

Option Description	ntp	Configure Network Time Protocol
	authentication-key	Specifies authentication key.
	key-id	Key ID, integer ranges from 1 to 65535
	key-type	Specifies a string for key type: {MD5 | SHA512}
	key	Key string. Max. 32 characters
Defaults	N/A	
Command Modes	Global configuration	
Usage Guidelines	N/A	

Examples	• Create KeyID(3) and key type "SHA512" with key string "moxa1234".
	`router# configure`
	`router(config)# ntp authentication-key 3 SHA512 moxa1234`
	`router(config)# exit`
	
	• Delete keyID(3) for NTP server authentication.
	`router# configure`
	`router(config)# no ntp authentication-key 3`
	`router(config)# exit`	

Error Messages	% Invalid key ID for the server, should be 1~65535.	
	% Invalid Key Type, should be (MD5 | SHA512).	
	% Invalid key length (max. 32 characters).	
	% Invalid key ID.	
	^Parse error	
	^Incomplete command	
Related Commands	ntp server ntp remote-server-auth ntp remote-server show ntp-auth-keys	

show clock

Use the **show clock** user EXEC command to display the time-related settings.

Synopsis

show clock

Option Description	clock	Display the system clock
Defaults	N/A	
Command Modes	Privileged EXEC / User EXEC	
Usage Guidelines	N/A	
Examples	router# show clock Current Time : Wed Oct 14 11:09:26 2017 Clock Source : Local Daylight Saving Start Date : End Date : Offset : Time Zone : GMT+8:00 Time Server : NTP/SNTP Server : Disabled NTP Server Auth : Disabled	
Error Messages	^Parse error	
	^Incomplete command	
Related Commands	clock set clock summer-time clock timezone ntp remote-server ntp server ntp remote-server-auth ntp authentication-key	

show ntp-auth-keys

Use the **show ntp-auth-keys** user EXEC command to display authentication keys for remote NTP servers.

Synopsis

show ntp-auth-keys

Option Description	ntp-auth-keys	Display NTP authentication keys
Defaults	N/A	
Command Modes	Privileged EXEC / User EXEC	
Usage Guidelines	N/A	

Examples	`router# show ntp-auth-keys`
	`+----------+`
	`| Key ID  Key Type  Key  |`
	`+-------  --------  ----------+`
	`  1  SHA512  ********`
	`  2  MD5  ********`
	`  3  SHA512  ********`	

Error Messages	^Parse error	
	^Incomplete command	
Related Commands	ntp server ntp remote-server-auth ntp authentication-key ntp remote-server	

Setting Check

settingcheck

To specify or modify the settingcheck function on the router, use the **settingcheck** global configuration command. To return to the default, use the **no** form of this command.

Synopsis

(config)# **settingcheck** {**timer** <second> |
l3l7-policy |
nat |
trusted-access}

(config)# **no settingcheck** {**l3l7-policy** |
nat |
trusted-access}

Option Description	timer	Specifies a timeout value to wait confirmation from the user.
	second	A timeout in seconds
	l3l7-policy	Enables or disables layer 3-7 policy setting check
	nat	Enables or disables nat setting check
	trusted-access	Enables or disables trusted-access setting check
Defaults	Disabled	
Command Modes	Global configuration	
Usage Guidelines	Enabling the SettingCheck function will execute these new policy changes temporarily until doubly confirmed by the user. If the user does not click the confirm button, the Industrial Secure Router will revert to the previous setting.	

Examples	Specify a timer (180 seconds) to check firewall policy.
	`router# configure`
	`router(config)# settingcheck timer 180`
	`router(config)# settingcheck l3l7-policy`
	`router(config)# exit`	

Error Messages	% Timer range must be 10 - 3600.	
	^Parse error	
	^Incomplete command	
Related Commands	show settingcheck	

show settingcheck

To check the settings of settingcheck function, use the **show settingcheck**.

Synopsis

show settingcheck

Option Description	settingcheck	Specifies settings of settingcheck function
Defaults	N/A	
Command Modes	Privileged EXEC / User EXEC	
Usage Guidelines	N/A	

Examples	`router# show settingcheck`
	`Setting Check`
	`  Layer 3-7 Policy  : Disable`
	`  NAT Policy  : Disable`
	`  Trusted Access List  : Disable`
	`  Timer  : 180 seconds`	

Error Messages	^Parse error	
	^Incomplete command	
Related Commands	settingcheck	

Security

Login Policy

aaa authentication

To set the login banner and fail message, use the **aaa authentication** global configuration command. To return to the default string, use the **no** form of this command.

Synopsis

(config)# **aaa authentication** {**banner** <text-banner> |
fail-message <text-fail-message>}

(config)# **no aaa authentication** {**banner** |
fail-message}

Option Description	banner	Specifies banner
	text-banner	A text string to be displayed on banner
	fail-message	Specifies fail message
	text-fail-message	A text string to be displayed while authentication failure.
Defaults	Empty string.	
Command Modes	Global configuration	
Usage Guidelines	• Maximum length of text-banner or text-fail-message is 512. • The text string comprises characters including **a-z, A-Z, 0-9 or . - _ @ ! # $ % ^ & * ( ).** Uses **** instead to represent a whitespace character.	

Examples	• Specify/modify the banner to "Welcome to use MOXA router".
	`router# configure`
	`router(config)# aaa authentication banner Welcome\\to\\use\\MOXA\\router`
	`router(config)# exit`
	• Specify/modify the fail-message to "Login Failed".
	`router# configure`
	`router(config)# aaa authentication fail-message Login\\Failed`
	`router(config)# exit`	

Error Messages	^Parse error	
	^Incomplete command	
Related Commands	show running config	

login-lockout

To specify or modify the login lockout function on the router, use the **login-lockout** global configuration command. To return to the default, use the **no** form of this command.

Synopsis

(config)# **login-lockout** [**retry-threshold** <threshold>|
lockout-time <minute>]

(config)# **no login-lockout** [{**retry-threshold** |
lockout-time}]

Option Description	retry-threshold	Specifies the maximum number of login retries before the account is locked out.
	threshold	Ranges from 1 to 10 times.
	lockout-time	Specifies the lockout duration (in minutes) during which a locked out account will be unable to log in.
	minute	Ranges from 1 to 60 minutes.
Defaults	Disabled	
Command Modes	Global configuration	
Usage Guidelines	N/A	

Examples	Set Login lockout for 5 attempts and 10 minutes lockout.
	`router# configure`
	`router(config)# login-lockout retry-threshold 5`
	`router(config)# login-lockout lockout-time 10`
	`router(config)# exit`	

Error Messages	% login lockout threshold should between 1~10	
	% login lockout threshold should between 1~60	
	^Parse error	
	^Incomplete command	
Related Commands	show running-configuration	

ip auto-logout

When the user does not touch the web management interface for a defined period of time, the management interface will logout automatically. To specify this feature, use the **ip auto-logout** global configuration command.

Synopsis

(config)# **ip auto-logout** <minute>

Option Description	minute	A time period in minutes.
Defaults	The default value is 5 minutes	
Command Modes	Global configuration	
Usage Guidelines	<minute>: 0 for disable, or 1 ~ 1440 minutes.	

Examples	Specify Auto Logout for 120 minutes.
	`router# configure`
	`router(config)# ip auto-logout 120`
	`router(config)# exit`	

Error Messages	% Switch auto-logout interval should be 0(disable) or 1~1440mins !!!	
	^Parse error	
	^Incomplete command	
Related Commands	N/A	

Trusted Access

interface trusted-access

To specify or modify accessible IP list, use the **interface trusted-access** global configuration command. To disable trusted access, use the **no** form of this command.

Synopsis

(config)# **interface trusted-access** [**lan** [<ip> <netmask> [**enable** | **disable**]]]

(config)# **no interface trusted-access** [**lan** [<ip> <netmask>]]

Option Description	trusted-access	Enables the accessible IP list
	lan	Specifies LAN interface
	ip	IP address
	netmask	Subnet mask for this IP address
	enable	Enables specified accessible IP address
	disable	Disables specified accessible IP address
Defaults	Accessible IP list is enabled by default. Accept all connection from LAN port is enabled by default.	
Command Modes	Global configuration	
Usage Guidelines	When the accessible IP list is enabled, only addresses on the list will be allowed access to the router.	

Examples	• Disable trusted-access to allow connection from all IP addresses.
	`router# configure`
	`router(config)# no interface trusted-access.`
	`router(config)# exit`
	
	• Disable "Accept all connection from LAN port" and specify 192.168.127.0/24 can access this router.
	`router# configure`
	`router(config)# no interface trusted-access lan`
	`router(config)# interface trusted-access lan 192.168.127.0 255.255.255.0 enable`
	`router(config)# exit`	

Error Messages	^Parse error	
	^Incomplete command	
Related Commands	show interfaces trusted-access settingcheck	

show interfaces trusted-access

Use the **show interfaces trusted-access** EXEC command to display the setting of trusted access function.

Synopsis

show interfaces trusted-access

Option Description	interfaces	Interface status and configuration
	trusted-access	Display trusted access configuration
Defaults	N/A	
Command Modes	Privileged EXEC / User EXEC	
Usage Guidelines	N/A	

Examples	Display trusted-access settings.
	`router # show interfaces trusted-access`
	`Trusted Access List : Enable`
	`Severity : <0> Emergency`
	`Syslog : Disable`
	`Trap : Disable`
	`Accept All LAN : Enable`
	`Index State IP Netmask`
	`----- ------- --------------- ---------------`
	`1 Disable 192.168.127.1 255.255.255.255`	

Error Messages	^Parse error	
	^Incomplete command	
Related Commands	interface trusted-access	

Certificate Management

sslcertgen

Use the sslcertgen privileged command to re-generate the certificate for SSL.

Synopsis

sslcertgen

Option Description	N/A	N/A
Defaults	N/A	
Command Modes	Privileged EXEC	
Usage Guidelines	Few minutes may be required. Web will be unavailable temporarily until it finished.	
Examples	N/A	
Error Messages	^Parse error	
Related Commands	N/A	

sshkeygen

Use the sshkeygen privileged command to re-generate the key for SSH.

Synopsis

sshkeygen

Option Description	N/A	N/A
Defaults	N/A	
Command Modes	Privileged EXEC	
Usage Guidelines	Few minutes may be required. Web will be unavailable temporarily until it finished.	
Examples	N/A	
Error Messages	^Parse error	
Related Commands	N/A	

Authentication

auth mode

To specify or modify authentication protocol, use the **auth mode** global configuration command. To return to the default, use the **no** form of this command.

Synopsis

(config)# **auth mode** {**local** | **radius** [**local**]}

(config)# **no auth mode**

Option Description	mode	Specifies authentication protocol
	local	Specifies local authentication
	radius	Specifies RADIUS authentication
Defaults	local	
Command Modes	Global configuration	
Usage Guidelines	If way of authentication (RADIUS) is enabled, but the remote RADIUS server is unreachable or unavailable, it will not be possible to login via network services (HTTP/HTTPS/Telnet/SSH) anymore. The only way to access the device is using console port to login.	

Examples	Authentication occurs sequentially in RADIUS and then locally.
	`router# configure`
	`router(config)# auth mode radius local`
	`router(config)# exit`	

Error Messages	^Parse error	
	^Incomplete command	
Related Commands	show auth radius auth radius	

auth radius

To specify or modify the remote RADIUS authentication server, use the **auth** global configuration command. To return to the default, use the **no** form of this command.

Synopsis

(config)# **auth radius** {**server** {**primary** <server-ip> **port** <server-port> **key** <shared-key>|
backup <server-ip> **port** <server-port> **key** <shared-key>} |
auth-type {**pap** |
chap |
peap-mschapv2}}

(config)# **no auth radius server** {**primary** | **backup**}

Option Description	radius	Specifies remote RADIUS authentication
	server	Specifies RADIUS primary or backup servers
	primary	Specifies primary RADIUS authentication server
	server-ip	IP address of the RADIUS authentication server
	port	Specifies a port number of the remote RADIUS Server
	server-port	Port of the RADIUS authentication server
	key	Specifies a shared-key of the remote RADIUS Server
	shared-key	Shared key of the RADIUS authentication server
	backup	Specifies backup RADIUS authentication server
	auth-type	Specifies type of authentication
	pap	PAP
	chap	CHAP
	peap-mschapv2	PEAP-MSCHAPv2
Defaults	N/A	
Command Modes	Global configuration	
Usage Guidelines	N/A	

Examples	Specify and enable the primary remote RADIUS server (192.168.1.5), port (2812) and shared key (radius-key).
	`router# configure`
	`router(config)# auth radius server primary 192.168.1.5 port 2812 key radius-key`
	`router(config)# auth mode radius`
	`router(config)# exit`	

Error Messages	% Radius index must be 1~2	
	% Must be greater than 0 and smaller than 65536	
	% The length of Shared Key must be greater than 0 and smaller than 15.	
	^Parse error	
	^Incomplete command	
Related Commands	show auth radius auth mode	

show auth radius

To check the settings of RADIUS server, use the **show auth radius** command.

Synopsis

show auth radius

Option Description	auth	Specifies RADIUS server settings
Defaults	N/A	
Command Modes	Privileged EXEC / User EXEC	
Usage Guidelines	N/A	

Examples	`router# show auth radius`
	
	`Radius information:`
	`  Authentication Type  : Local`
	`  Type  : EAP-PEAP MSCHAPv2`
	`  Primary Auth server  : 192.168.1.5`
	`  Primary Server Port  : 2812`
	`  Primary Shared key  : ********`
	`  Backup Auth server  :`
	`  Backup Server Port  : 1812`
	`  Backup Shared key  : ********`	

Error Messages	^Parse error	
	^Incomplete command	
Related Commands	auth mode auth radius	

Port-based access control (IEEE 802.1X)

interface ethernet dot1x

To enable 802.1x port-based access control function, use the **interface ethernet** global configuration command and **dot1x** sub-level configuration command set. To disable this function, use the **no** form of this command.

Synopsis

(config)# **interface ethernet** <mod-port>
(config-if)# **dot1x** {**auth** |
reauth}

(config-if)# **no dot1x**

Option Description	mod-port	Port ID (consists of module/port-number) or list. E.g. 1/1,2,3,2/1-3,5,...
	dot1x	Specifies 802.1x settings.
	auth	Enables 802.1x port authentication function
	reauth	802.1x port re-authenticate immediately
Defaults	Disabled	
Command Modes	Global configuration, sub-level configuration	
Usage Guidelines	N/A	

Examples	Specify PORT3 to enable port-based access control.
	`router# configure`
	`router(config)# interface ethernet 1/3`
	`router(config-if)# dot1x auth`
	`router(config-if)# exit`	

Error Messages	% Illegal parameter	
	% Port doesn't enable 802.1x	
	^Parse error	
	^Incomplete command	
Related Commands	show interfaces ethernet show dot1x	

dot1x radius

To specify or modify the RADIUS server settings for 802.1X port access control, use the **dot1x radius** global configuration command. To return to the default, use the **no** form of this command.

Synopsis

(config)# **dot1x radius** {**1st-server** | **2nd-server**} {**server-ip** <ip>|
server-port <port> |
shared-key <key>}

(config)# **no dot1x radius** {**both** |
1st-server |
2nd-server}

Option Description	1st-server	Specifies first RADIUS authentication server.
	2nd-server	Specifies second RADIUS authentication server.
	server-ip	Specifies IP address of the RADIUS authentication server
	ip	IP address
	server-port	Specifies port of the RADIUS authentication server
	port	Port number
	shared-key	Specifies the shared key of the RADIUS authentication server
	key	Shared key
	both	Disables both first and second RADIUS servers
Defaults	N/A	
Command Modes	Global configuration	
Usage Guidelines	N/A	

Examples	Specify the first RADIUS server (192.168.1.6), port (3812) and shared key (rad-ser-key).
	`router# configure`
	`router(config)# dot1x radius 1st-server server-ip 192.168.1.6`
	`router(config)# dot1x radius 1st-server server-port 3812`
	`router(config)# dot1x radius 1st-server shared-key rad-ser-key`
	`router(config)# exit`	

Error Messages	% Must be greater than 0 and smaller than 65536	
	^Parse error	
	^Incomplete command	
Related Commands	show dot1x show dot1x all show dot1x interfaces show dot1x local-userdb show dot1x radius	

dot1x auth

To specify or modify the RADIUS server settings for 802.1X port access control, use the **dot1x radius** global configuration command. To return to the default, use the **no** form of this command.

Synopsis

(config)# **dot1x auth** {**local** |
radius |
radius-local}

Option Description	local	Specifies local database as user account database for 802.1X authentication.
	radius	Specifies RADIUS authentication server.
	radius-local	Specifies RADIUS as the first authentication sever; local database as the second priority.
Defaults	Local	
Command Modes	Global configuration	
Usage Guidelines	N/A	

Examples	Specify Radius server as database for authentication.
	`router# configure`
	`router(config)# dot1x auth radius`
	`router(config)# exit`	

Error Messages	^Parse error	
	^Incomplete command	
Related Commands	show dot1x show dot1x all show dot1x interfaces show dot1x local-userdb show dot1x radius	

dot1x local-userdb

To add or modify local user for 802.1X authentication, use the **dot1x local-userdb** global configuration command. To delete a local user from the local database, use the **no** form of this command.

Synopsis

(config)# **dot1x local-userdb username** <user-name> **password** <pwd>

(config)# **no dot1x local-userdb username** <user-name>

Option Description	username	Specifies user's name in local database
	user-name	User's name in a local database.
	password	Specifies user's password
	pwd	User's password.
Defaults	Local	
Command Modes	Global configuration	
Usage Guidelines	N/A	

Examples	Specify a user name (locusr1) with password (locusrpwd) in a database for authentication.
	`router# configure`
	`router(config)# dot1x local-userdb username locusr1 password locusrpwd`
	`router(config)# exit`	

Error Messages	Username is not in database	
	Username or password exceed maximum length	
	^Parse error	
	^Incomplete command	
Related Commands	show dot1x show dot1x all show dot1x interfaces show dot1x local-userdb show dot1x radius	

dot1x reauth

To enable or configure re-auth period for 802.1X authentication, use the **dot1x reauth** global configuration command. To disable re-auth or return period to the default setting, use the **no** form of this command.

Synopsis

(config)# **dot1x reauth** [**period** <second>]

(config)# **no dot1x reauth** [**period**]

Option Description	period	Specify the re-authentication period (in seconds).
	second	Ranges from 60 to 65535 seconds
Defaults	3600	
Command Modes	Global configuration	
Usage Guidelines	Enables re-auth before specifies re-authentication period.	

Examples	Specify a re-auth period (1800 seconds) for 802.1X authentication and enable it.
	`router# configure`
	`router(config)# dot1x reauth period 1800`
	`router(config)# exit`	

Error Messages	% Invalid Re-Auth Period!!! Must not be smaller than 60 or greater than 65535	
	^Parse error	
	^Incomplete command	
Related Commands	show dot1x show dot1x all show dot1x interfaces show dot1x local-userdb show dot1x radius	

show dot1x

To check the 802.1X settings on the router, use the **show dot1x** command.

Synopsis

 # show dot1x [{**all** |
interfaces ethernet <if-name> |
local-userdb |
radius}]

Option Description	dot1x	Specifies to display 802.1x settings
	all	Specifies to display 802.1X all interface information
	interfaces ethernet	Specifies to display 802.1X specific interface information
	if-name	802.1X interface name
	local-userdb	Specifies to display current local database
	radius	Specifies to display 802.1x radius settings
Defaults	N/A	
Command Modes	Privileged EXEC / User EXEC	
Usage Guidelines	N/A	
Examples	router # show dot1x Dot1x Info Database Option : Local Re-Auth : Enable Re-Auth Period : 3600 1st Auth server ---------- IP/name : 192.168.127.253 Port : 1812 Shared key : 11111111112222222223333333333 2nd Auth server ---------- IP/name : Port : 1812 Shared key : Port 802.1X Enable ---- ------------- 1/1 Disabled 1/2 Disabled 1/3 Disabled 1/4 Disabled 1/5 Disabled 1/6 Disabled 1/7 Disabled 1/8 Disabled	
Error Messages	^Parse error	
	^Incomplete command	
Related Commands	dot1x radius dot1x auth dot1x local-userdb dot1x reauth	

Security Notification

security-notification

To enable security notification features on the router, use the **security-notification** global configuration command. To disable the feature, use the **no** form of this command.

Synopsis

(config)# **security-notification** {**event-accessviolation** |
event-loginfail |
event-firewall |
event-dosattack}

(config)# **no security-notification** {**event-accessviolation** |
event-loginfail |
event-firewall |
event-dosattack}

Option Description	event-accessviolation	Specifies access violation event notification
	event-loginfail	Specifies login fail event notification
	event-firewall	Specifies firewall event notification
	event-dosattack	Specifies DoS attack event notification
Defaults	Disabled	
Command Modes	Global configuration	
Usage Guidelines	N/A	

Examples	Enable security notification for Login fail event.
	`router# configure`
	`router(config)# security-notification event-loginfail`
	`router(config)# exit`	

Error Messages	^Parse error	
	^Incomplete command	
Related Commands	show security-notification	

clear security-notification

To clear security notification and status, use the **clear security-notification** global configuration command.

Synopsis

(config)# **clear security-notification** [**status**]

Option Description	security-notification	Specifies to clear security notification information
	status	Specifies to clear security notification information status
Defaults	N/A	
Command Modes	Global configuration	
Usage Guidelines	N/A	
Examples	N/A	
Error Messages	^Parse error	
	^Incomplete command	
Related Commands	show security-notification security-notification	

show security-notification

To check the security-notification settings on the router, use the **show security-notification** command.

Synopsis

show security-notification {**setting** | **status**}

Option Description	setting	Specifies to display security notification settings
	status	Specifies to display security notification status
Defaults	N/A	
Command Modes	Privileged EXEC / User EXEC	
Usage Guidelines	N/A	
Examples	router# show security-notification setting ========== Security Notification Configuration ========== Firewall Event Notification : Enable DoS Attack Event Notification : Enable Access Violation Event Notification : Enable Login Fail Event Notification : Enable router# show security-notification status ========== Security Notification Status ========== Firewall Event Notification : Safe DoS Attack Event Notification : Safe Access Violation Event Notification : Safe Login Fail Event Notification : Safe ==	
Error Messages	^Parse error	
	^Incomplete command	
Related Commands	security-notification	

Diagnostics

System Status

show usage

To check the CPU usage and memory utilization on the router, use the **show usage** command.

Synopsis

show usage

Option Description	usage	Display CPU usage and Memory utilization information
Defaults	N/A	
Command Modes	Privileged EXEC / User EXEC	
Usage Guidelines	N/A	
Examples	router# show usage CPU: 2.79% Mem: 328056K used, 1703484K free, 117036K shrd, 996K buff, 117344K cached	
Error Messages	^Parse error	
	^Incomplete command	
Related Commands	N/A	

Network Status

show interfaces counters

To check the packet counter information for all ports including trunk ports, use the **show interfaces counters** command.

Synopsis

show interfaces counters

Option Description	counters	Displays packet counters including TX, RX for all ports.
Defaults	N/A	
Command Modes	Privileged EXEC / User EXEC	
Usage Guidelines	N/A	

Examples	Display packet counter information for all ports.
	`router# show interfaces counters`
	`  Port      Tx Packets           Rx Packets`
	`  ----  -------------------  -------------------`
	`  1/ 1                     0                     0`
	`  1/ 2                442490                673826`
	`  1/ 3                     0                     0`
	`  1/ 4                     0                     0`
	`  1/ 5                     0                     0`
	`  1/ 6                     0                     0`
	`  1/ 9                     0                     0`
	`  1/10                     0                     0`
	`  1/11                     0                     0`
	`  1/12                     0                     0`
	`  1/13                     0                     0`
	`  1/14                     0                     0`
	`  1/15                     0                     0`
	`  1/16                     0                     0`
	`  Trk1                 7273                  6897`	

Error Messages	^Parse error ^Incomplete command	
Related Commands	show interfaces ethernet show interfaces trunk	

lldp

Use the **lldp enable** global configuration command to enable LLDP. To stop LLDP or disable LLDP Ring bypass, use the **no** form of this command.

Synopsis

(config)# **lldp** {**enable** |
timer <seconds> |
enable-bypass}

(config)# **no lldp** {**enable** | **timer** | **enable-bypass**}

Option Description	enable	Enables/disables LLDP feature
	timer	Specifies a Message Transmit Interval
	seconds	Ranges from 5 to 32768 seconds.
	enable-bypass	Specifies to enable / disable LLDP Ring port bypassing feature
Defaults	LLDP is enabled in factory default. Transmission frequency of LLDP updates is 30 seconds.	
Command Modes	Global configuration	
Usage Guidelines	In the case of TN router acts as a member of the Ring topology and Moxa Auto-Config mechanism is required, it's vital to enable "enable-bypass" to ensure the entire Auto-Config process is completed.	

Examples	Enable LLDP and specify timer (60 seconds) and enable Ring bypass feature.
	`router# configure`
	`router(config)# lldp timer 60`
	`router(config)# lldp enable`
	`router(config)# lldp enable-bypass`
	`router(config)# exit`	

Error Messages	^Parse error	
	^Incomplete command	
Related Commands	show lldp	

show lldp

Use the **show lldp** command to display the LLDP settings and the LLDP neighbor information.

Synopsis

show lldp [**entry**]

Option Description	show	Show running system information
	lldp	Display LLDP information
	entry	LLDP entries
Defaults	N/A	
Command Modes	Privileged EXEC / User EXEC	
Usage Guidelines	N/A	

Examples	router# show lldp
	  LLDP Enable : Enable
	  LLDP Ring Port Bypass : Enable
	  Message Transmit Interval : 60
	
	router# show lldp entry
	
	Port 3
	  Neighbor ID : 00:90:e8:0a:0a:0a
	  Neighbor Port 3
	  Neighbor Port Descript : 100TX,RJ45.
	  Neighbor System : Managed Redundant Router 00000
	Port 4
	  Neighbor ID : 00:90:e8:0a:0a:0a
	  Neighbor Port 2
	  Neighbor Port Descript : 100TX,RJ45.
	  Neighbor System : Managed Redundant Router 00000	

Error Messages	^Parse error	
	^Incomplete command	
Related Commands	lldp	

show arp

To check the ARP cache on the router, use the **show arp** command.

Synopsis

show arp

Option Description	arp	Specifies to display ARP cache information
Defaults	N/A	
Command Modes	Privileged EXEC / User EXEC	
Usage Guidelines	N/A	
Examples	router# show arp Address Hardware Addr Interface 192.168.127.1 50:7b:9d:e1:82:5a LAN20	
Error Messages	^Parse error	
	^Incomplete command	
Related Commands	N/A	

Event Logs and Notifications

copy event-log

To export different types of event-logs to a storage device or a remote file server, use the **copy event-log** privileged command on the router.

Synopsis

copy event-log <event-db> <method> [<ip> [<account> <password>]]

Option Description	Event-db	Specifies an integer for one of event-log types: {System(0) | VPN(1) | Trust-Access(2) | Malformed-Packets(3) | DOS-Policy(4) | Device-Lockdown(5) | L3L7-Policy(6) | Protocol-Filter-Policy(7) | ADP(8) | IPS(9) | Session-Control(10) | L2-policy(11)}
	method	Specifies an integer for below method: {TFTP(1) | USB(2) | SCP(3) | SFTP(4)}
	ip	IP address of the file server
	account	Specifies the user's name to login remote SCP or SFTP file server
	password	Specifies the password for authentication.
Defaults	N/A	
Command Modes	Privileged EXEC	
Usage Guidelines	• When selecting method "TFTP(1)", there is no need for <account> and <password> to complete the command. • When selecting method "USB(2)", there is no need for <ip>, <account> and <password> to complete the command.	

Examples	• Export System event-logs to USB storage device.
	`router# copy event-log 0 2`
	`Exported Event Log File: system.json`
	`Event Log File is exporting now, please wait.`
	`Event Log File Exporting is Complete.`
	`router#`
	• Export System event-logs to a remote SCP server.
	`router# copy event-log 0 3 192.168.127.102 moxa moxa`
	`Server IP: 192.168.127.102`
	`Exported Event Log File: system.json`
	`Event Log File is exporting now, please wait.`
	`Event Log File Exporting is Complete.`
	`router#`	

Error Messages	% The event log DB only allows 0 ~ 11	
	% Only method 1 ~ 4 are supported	
	% TFTP/SCP/SFTP needs host IP address!	
	No USB Device	
	Event Log File Exporting Failed!	
	% SCP/SFTP needs to key-in username!	
	^Parse error	
	^Incomplete command	
Related Commands	auto-backup event-log	

warning-notification system-event

To specify or modify warning notification for system events, use the **warning-notification system-event** global configuration command. To return to default settings, use the **no** form of this command.

Synopsis

(config)# **warning-notification system-event** <events> {**action** <action-index> |
severity <severity-level> |
active}

(config)# **no warning-notification system-event** <events> **active**

Option Description	events	Specifies one of below event names: {**cold-start** | **warm-start** | **config-changed** | **pwr1-trans-on** | **pwr2-trans-on** | **pwr1-trans-off** | **pwr2-trans-off** | **auth-fail** | **topology-changed** | **coupling-changed** | **master-changed** | **vrrp-state-changed** | **dot1x-auth-fail** | **poe-pd-on** | **poe-pd-off** | **poe-exceed-system-threshold** | **poe-fetbad** | **poe-over-temperature** | **poe-vee-uvlo** | **poe-pd-over-current** | **poe-pd-check-fail** | **poe-exceed-power-budget** | **vpn-connected** | **vpn-disconnected** | **firewall-policy-changed** | **firmware-upgrade-success** | **firmware-upgrade-failure** | **log-service-ready** }
	action	Configure actions of events
	action-index	Specifies an integer for: {Trap only(1) | Email only(2) | Trap+Email(3) | Syslog only(4) | Trap+Syslog(5) | Email+Syslog(6) | Trap+Email+Syslog(7) | Relay1 only(8) | Trap+Relay1(9) | Email+Relay1(10) | Trap+Email+Relay1(11) | Syslog+Relay1(12) | Trap+Syslog+Relay1(13) | Email+Syslog+Relay1(14) | Trap+Email+Syslog+Relay1(15) | None(0)}
	severity	Configure event severity
	severity-level	Specifies an integer for: {Emergency(0) | Alert(1) | Critical(2) | Error(3) | Warning(4) | Notice(5) | Information(6) | Debug(7)}
	active	Activate event waring
Defaults	Disabled	
Command Modes	Global configuration	
Usage Guidelines	• Configure SNMP Trap in advance when taking action of events { Trap only(1) | Trap+Email(3) | Trap+Syslog(5) | Trap+Email+Syslog(7) | Trap+Relay1(9) | Trap+Email+Relay1(11) | Trap+Syslog+Relay1(13) | Trap+Email+Syslog+Relay1(15) } • Configure Email server in advance when taking action of events { Email only(2) | Trap+Email(3) | Email+Syslog(6) | Trap+Email+Syslog(7) | Email+Relay1(10) | Trap+Email+Relay1(11) | Email+Syslog+Relay1(14) | Trap+Email+Syslog+Relay1(15) } • Configure Syslog server in advance when taking action of events { Syslog only(4)| Trap+Syslog(5) | Email+Syslog(6) | Trap+Email+Syslog(7) | Syslog+Relay1(12) | Trap+Syslog+Relay1(13) | Email+Syslog+Relay1(14) | Trap+Email+Syslog+Relay1(15) }	

Examples	Enable "warm start" event notification and send warning message to the Syslog server with severity DEBUG.
	`router# configure`
	`router(config)# warning-notification system-event warm-start action 4`
	`router(config)# warning-notification system-event warm-start severity 7`
	`router(config)# warning-notification system-event warm-start active`
	`router(config)# exit`	

Error Messages	% Invalid severity type	
	% Invalid action value or non-support this combination action	
	^Parse error	
	^Incomplete command	

Related Commands	snmp-server host snmp-server trap-mode email-warning logging <ip-addr>

interface ethernet warning-notification port-event

To specify or modify warning notification for port events, use the **interface ethernet** global configuration command and **warning-notification port-event** sub-level configuration command set. To return to default settings, use the **no** form of this command.

Synopsis

(config)# **interface ethernet** <mod-port>
(config-if)# **warning-notification port-event** {**active** |
severity <severity-level>|
event {**link-on** | **link-off**} |
action <action-index>}

(config-if)# **no warning-notification port-event** {**active** |
event {**link-on** | **link-off**}}

Option Description		
	mod-port	Port ID (consists of module/port-number) or list. E.g. 1/1,2,3,2/1-3,5,...
	port-event	Specifies port events for notification.
	active	Enables port event notification
	severity	Specifies event severity.
	severity-level	Specifies an integer for: {Emergency(0) | Alert(1) | Critical(2) | Error(3) | Warning(4) | Notice(5) | Information(6) | Debug(7)}
	event	Specifies link on/off events
	link-on	Link on
	link-off	Link off
	action	Specifies actions for port event notification
	action-index	Specifies an integer for: {Trap only(1) | Email only(2) | Trap+Email(3) | Syslog only(4) | Trap+Syslog(5) | Email+Syslog(6) | Trap+Email+Syslog(7) | Relay1 only(8) | Trap+Relay1(9) | Email+Relay1(10) | Trap+Email+Relay1(11) | Syslog+Relay1(12) | Trap+Syslog+Relay1(13) | Email+Syslog+Relay1(14) | Trap+Email+Syslog+Relay1(15) | None(0)}
Defaults	Disabled	
Command Modes	Global configuration, sub-level configuration	
Usage Guidelines	• Configure SNMP Trap in advance when taking action of events { Trap only(1) | Trap+Email(3) | Trap+Syslog(5) | Trap+Email+Syslog(7) | Trap+Relay1(9) | Trap+Email+Relay1(11) | Trap+Syslog+Relay1(13) | Trap+Email+Syslog+Relay1(15) } • Configure Email server in advance when taking action of events { Email only(2) | Trap+Email(3) | Email+Syslog(6) | Trap+Email+Syslog(7) | Email+Relay1(10) | Trap+Email+Relay1(11) | Email+Syslog+Relay1(14) | Trap+Email+Syslog+Relay1(15) } • Configure Syslog server in advance when taking action of events { Syslog only(4)| Trap+Syslog(5) | Email+Syslog(6) | Trap+Email+Syslog(7) | Syslog+Relay1(12) | Trap+Syslog+Relay1(13) | Email+Syslog+Relay1(14) | Trap+Email+Syslog+Relay1(15) }	

Examples	Enable Port-3 link-on event notification and send warning message to the Syslog server with severity DEBUG.
	`router# configure`
	`router(config)# interface ethernet 1/3`
	`router(config-if)# warning-notification port-event event link-on`
	`router(config-if)# warning-notification port-event action 4`
	`router(config-if)# warning-notification port-event severity 7`
	`router(config-if)# warning-notification port-event active`	

	`router(config-if)# exit`
Error Messages	% Invalid severity type
	% Invalid action value or non-support this combination action
	^Parse error
	^Incomplete command
Related Commands	show interfaces ethernet snmp-server host snmp-server trap-mode email-warning logging <ip-addr>

logging-capacity

To specify or modify the logging capacity and oversize action on the router, use the **logging-capacity** global configuration command. To disable warning notification, use the **no** form of this command.

Synopsis

(config)# **logging-capacity** {<threshold> |
snmp-trap-warning |
email-warning |
over-size-action {**overwrite-oldest** |
stop-recording }} {<category-name>}

(config)# **no logging-capacity** [**snmp-trap-warning** | **email-warning**] {<category-name>}

Option Description	threshold	Threshold to trigger a warning notification. Ranges from 50 to 100.
	category-name	Specifies one of below function categories : {system | vpn | trusted-access | malformed-packets | dos-policy | device-lockdown | layer-3-7-policy | protocol-filter-policy | adp | ips | session-control | layer2-filter }
	snmp-trap-warning	Specifies notification via SNMP Trap
	email-warning	Specifies notification via email
	over-size-action	Specifies action when the log threshold is exceeded.
	overwrite-oldest	Specifies to overwrite the oldest log.
	stop-recording	Specifies to stop record event logs.
Defaults	N/A	
Command Modes	Global configuration	
Usage Guidelines	N/A	

Examples	Specify and enable threshold to 60 % for System events and send a warning via SNMPT Trap. Overwrite the oldest log when log threshold is exceeded.
	`router# configure`
	`router(config)# logging-capacity 60 system`
	`router(config)# logging-capacity snmp-trap-warning system`
	`router(config)# no logging-capacity email-warning system`
	`router(config)# logging-capacity over-size-action overwrite-oldest system`
	`router(config)# exit`	

Error Messages	^Parse error	
	^Incomplete command	
	% Event log capacity threshold should between 50~100	
	% Error Name:	
Related Commands	show logging-capacity	

email-warning

To specify or modify email server for warning notification, use the **email-warning** global configuration command. To return to default settings, use the **no** form of this command.

Synopsis

(config)# **email-warning** {**server** <ip> <port> |
mail-address <mail-index> <recv-email> |
account <name> <password> |
sender <sender-email>}

(config)# **no email-warning** {**server** |
account |
sender |
mail-address <mail-index>}

Option Description	server	Specifies the email server.
	ip	IP address of the email server
	port	SMTP port of the email server
	mail-address	Specifies recipient's email address
	mail-index	Ranges from 1 to 4
	recv-email	Recipient's email address
	account	Specifies sender's email account
	name	Sender's email account
	password	Sender's email password
	sender	Specifies sender's email
	sender-email	Sender's email address
Defaults	N/A	
Command Modes	Global configuration	
Usage Guidelines	N/A	

Examples	Specify E-mail server IP (192.168.1.1), port (2525) with account name (user1) and password (user1-password). Sender email is user1@example.com; recipient email is worker1@example.com.
	`router# configure`
	`router(config)# email-warning server 192.168.1.1 2525`
	`router(config)# email-warning mail-address 1 worker1@example.com`
	`router(config)# email-warning account user1 user1-password`
	`router(config)# email-warning sender user1@example.com`
	`router(config)# exit`	

Error Messages	^Parse error	
	^Incomplete command	
Related Commands	show email-warning config	

logging

To specify or modify logging events for DoS/IPsec/Trusted-Access/Firewall functions, use the **logging** global configuration command sets. To return to default settings, use the **no** form of this.

Synopsis

(config)# **logging** {**dos** [{**severity** <severity-level>|
flash |
syslog |
trap}] |
ipsec [{**syslog** |
flash |
trap}] |
trusted-access [{**severity** <severity-level>|
flash |
syslog |
trap}] |
firewall |
l3l7-policy}

(config)# **no logging** [{**dos** [{**flash** |
syslog |
trap}] |
ipsec [{**syslog** |
flash |
trap}] |
trusted-access [{**flash** |
syslog |
trap}] |
firewall |
l3l7-policy }]

Option Description	dos	Enables/disables event logging for DoS function
	severity	Specifies severity of logging for DoS function
	severity-level	Specifies an integer for: {Emergency(0) | Alert(1) | Critical(2) | Error(3) | Warning(4) | Notice(5) | Information(6) | Debug(7)}
	flash	Specifies writing event logs into flash.
	syslog	Specifies sending event logs to syslog server
	trap	Specifies sending event logs via SNMP trap
	ipsec	Enables/disables event logging for IPsec function
	trusted-access	Enables/disables event logging for Trusted-Access function
	l3l7-policy	Enables/disables event logging for Layer 3-7 policy
	firewall	Enables/disables event logging for Firewall function (**No longer supported after version 3.0**.)
Defaults	Disabled	
Command Modes	Global configuration	
Usage Guidelines	• Configure SNMP Trap in advance when sending event logs via SNMP trap. • Configure Syslog server in advance when sending event logs to syslog server.	

Examples	• Enable logging for Trusted-Access function. Specify the severity to DEBUG and write logs into internal Flash storage.
	`router# configure`
	`router(config)# logging trusted-access severity 7`
	`router(config)# logging trusted-access flash`
	`router(config)# logging trusted-access`
	`router(config)# exit`
	
	• Disable logging for Layer 3-7 policy function.
	`router# configure`
	`router(config)# no logging l3l7-policy`	

	% Severity level is out of range!	

Error Messages	% The firewall configuration is not compatible with firmware versions prior to V2.0.
	^Parse error
	^Incomplete command
Related Commands	logging-capacity show logging event-log show logging event-log snmp-server host snmp-server trap-mode logging <ip-addr>

Syslog server settings

To specify or modify syslog server settings, use the **logging** global configuration command. To delete a specified syslog server, use the **no** form of this command.

Synopsis

(config)# **logging** <ip-addr> [{<port> [{<server-index> [**authentication tls** <local-cert>] |
enable |
disable}] |
authentication tls <local-cert>}]

(config)# **no logging** {<ip-addr> | **enable** <server-index>}

Option Description	ip-addr	IP address of the syslog server
	port	Port of the syslog server. Ranges from 1 to 65535.
	server-index	Ranges from 1 to 3.
	enable	Enables specified syslog server
	disable	Disables specified syslog server
	authentication tls	Specifies TLS authentication
	local-cert	Previously imported certificate
Defaults	N/A	
Command Modes	Global configuration	
Usage Guidelines	• Max. number of Syslog server is 3. • If necessary, the certificate must be installed via web GUI when utilizing TLS authentication with the Syslog server.	

Examples	• Specify the first Syslog server (192.168.1.2), port (5145) and enable it.
	`router# configure`
	`router(config)# logging 192.168.1.2 5145 1`
	`router(config)# exit`
	
	• Disable the first Syslog server entry.
	`router# configure`
	`router(config)# no logging enable 1`
	`router(config)# exit`	

Error Messages	% This server is not existed in the list.	
	% Server list is full.	
	^Parse error	
	^Incomplete command	
Related Commands	logging warning-notification system-event interface ethernet warning-notification	

clear logging

To clear event logs including of VPN/System/Firewall, use the **clear logging event-log** privileged command.

Synopsis

clear logging event-log [{**vpn** |
system |
trusted-access |
malformed |
dos |
l3l7-policy |
dpi |
adp |
ips |
session-control |
l2-filter }]

Option Description	vpn	VPN event logs
	system	System event logs
	trusted-access	Trust Access Event Logs
	malformed	Malformed Packets Event Logs
	dos	DoS Policy Event Logs
	l3l7-policy	Layer 3-7 Event Logs
	dpi	Protocol Filter Policy Event Logs
	adp	ADP Event Logs
	ips	IPS Event Logs
	session-control	Session Control Event Logs
	l2-filter	Layer 2 Event Logs
Defaults	N/A	
Command Modes	Privileged EXEC	
Usage Guidelines	N/A	

Examples	Clear all system event logs.
	`router# clear logging event-log system`
	`router#`	

Error Messages	^Parse error	
	^Incomplete command	
Related Commands	show logging event-log	

auto-backup event-log

Use the **auto-backup** global configuration commands on the router to enable auto-backup event logs to the local storage. Use the **no** form of this command to disable auto-backup function.

Synopsis

(config)# **auto-backup** {**enable** | **event-log**}

(config)# **no auto-backup** {**enable** | **event-log**}

Option Description	enable	Specifies to enable hardware interface (USB) to allow the router to export event logs
	event-log	Specifies to automatically back up event logs to ABC-02
Defaults	N/A	
Command Modes	Global configuration	
Usage Guidelines	• A local storage (ABC-02) has to be plugged in advance. • Hardware interface (USB) has to be enabled in advance.	

Examples	• Enable auto-backup to export event-logs to the USB storage device.
	`router# configure`
	`router(config)# auto-backup enable`
	`router(config)# auto-backup event-log`
	`router(config)# exit`
	• Disable auto-backup to export event-logs to the USB storage device.
	`router# configure`
	`router(config)# no auto-backup event-log`
	`router(config)# no auto-backup enable`
	`router(config)# exit`	

Error Messages	^Parse error	
	^Incomplete command	
Related Commands	show auto-backup auto-backup config	

snmp-server host

To set up a target IP address for SNMP trap notification, use the **snmp-server host** global configuration command. To remove SNMP trap target IP address, use the **no** form of this command.

Synopsis

(config)# **snmp-server host** <trap-ip> [<trap-community>]

(config)# **no snmp-server host** [<trap-ip> <trap-community>]

Option Description	trap-ip	IP address for SNMP trap notification
	trap-community	SNMP trap community string
Defaults	N/A	
Command Modes	Global configuration	
Usage Guidelines	• This command can add one trap IP at a time. Maximum number of target trap IP is 3. In the case of replacing one target IP among existing 3 IP, delete one trap IP and then add a new one is required. • When Specify/modify trap community, {trap-community} should come after {trap-ip}. • With the no form of this command, in the case of {trap-ip} and {trap-community} are not presented, all target IP will be cleared. • With the no form of this command, in the case of both correct {trap-ip} and {trap-community} are provided correctly, a specific {trap-ip} will be cleared.	

Examples	Specify a trap target IP address and modify the trap community string to "newTrap".
	`router# configure`
	`router(config)# snmp-server host 192.168.127.10 newTrap`
	`router(config)# exit`	

Error Messages	% Invalid IP Address.	
	% Host or Community is incorrect!!!	
	% Trap servers are full, please remove at least one first.	
	^Parse error	
	^Incomplete command	
Related Commands	snmp-server community snmp-server user snmp-server version snmp-server trap-mode snmp-server engineid show snmp	

snmp-server trap-mode

To enable all SNMP notifications (traps or informs) available on your system, use the **snmp-server trap-mode** global configuration command. To return to the default, use **no** form of this command.

Synopsis

(config)# **snmp-server trap-mode** {**trap-v1** |
trap-v2c |
trap-v3 |
inform [{**retry** <times> **timeout** <second> |
v3}]}

(config)# **no snmp-server trap-mode**

Option Description	trap-v1	SNMP v1 trap notification
	trap-v2c	SNMP v2c trap notification
	trap-v3	SNMP v3 trap notification
	inform	SNMP v2c inform request
	retry	Specifies inform retries
	times	Inform retry times. Ranges from 1 to 99.
	timeout	Specifies inform timeout
	second	Second, ranges from 1 to 300.
	v3	Specifies SNMP inform V3
Defaults	The default mode is "trap-v1"	
Command Modes	Global configuration	
Usage Guidelines	N/A	

Examples	Specify/modify SNMP v2c trap notification.
	`router# configure`
	`router(config)# snmp-server trap-mode trap-v2c`
	`router(config)# exit`	

Error Messages	% Invalid Retries Value. It must be 1 - 99.	
	% Invalid Timeout Value. It must be 1 - 300.	
	^Parse error	
	^Incomplete command	
Related Commands	snmp-server community snmp-server user snmp-server host snmp-server version snmp-server engineid show snmp	

snmp-server {trap-v3 | inform-v3}

To create SNMP trap / inform account on your system, use the **snmp-server {trap-v3 | inform-v3}** global configuration command.

Synopsis

(config)# **snmp-server** {**trap-v3** | **inform-v3**} {**user** <name> **auth** <authtype> <authpass> **priv** <enc-key>}

Option Description	trap-v3	Specifies SNMP v3 trap notification
	inform-v3	Specifies SNMP v3 inform request
	user	Specifies to create the SNMP Trap/Inform user.
	name	User's name. Max. string length is 31.
	auth	Specifies authentication type
	authtype	Specifies one of the strings {no-auth | md5 | sha}
	authpass	Authentication key. String length ranges from 8 to 30.
	priv	Specifies to use AES encryption
	enc-key	AES encryption key. String length ranges from 8 to 30.
Defaults	N/A	
Command Modes	Global configuration	
Usage Guidelines	Only one user is permitted. Executing the command again will overwrite the existing settings.	

Examples	Create a SNMP trap-v3 account.
	`router# configure`
	`router(config)# snmp-server trap-v3 user trapv3-user auth sha moxa1234 priv 1234moxa`
	`router(config)# exit`	

Error Messages	^Parse error	
	^Incomplete command	
Related Commands	snmp-server community snmp-server user snmp-server host snmp-server version snmp-server engineid show snmp	
Related Commands	service dhcp ip dhcp static ip dhcp-relay interface ethernet show ip dhcp show ip dhcp static show ip auto-assign show ip dhcp binding show ip dhcp-relay	

show logging event-log

Use the **show logging** user EXEC command to display the setting of the syslog server.

Synopsis

show logging event-log [{**vpn** | **system** | **l3l7-policy** | **trust-access** | **malformed** | **dos** | **dpi** | **adp** | **ips** | **session-control** | **l2-filter**}] [**severity** <level-range>]

Option Description	logging	Display syslog information
	event-log	Display system event logs
	vpn	Specifies all VPN event logs
	system	Specifies all System event logs
	l3l7-policy	Specifies all layer 3 to 7 event logs
	trust-access	Specifies trust-access event logs
	malformed	Specifies malformed packet event logs
	dos	Specifies DoS event logs
	dpi	Specifies protocol filter policy logs
	adp	Specifies ADP logs
	ips	Specifies IPS logs
	session-control	Specifies session control event logs
	l2-filter	Specifies Layer 2 policy event logs
	severity	Specifies to display a specific range of severity levels
	level-range	Severity level ranges 0 to 7. Specifies a range of level. E.g. 1-1, 5-7, ...
Defaults	N/A	
Command Modes	Privileged EXEC / User EXEC	
Usage Guidelines	N/A	
Examples	router# show logging event-log system severity 0-0 System Log: 2 message lines logged, ---------- Index Date Time Severity Event ----- ---- ---- -------- ----- 1 2017/10/14 12:04:14 <0> [Configuration Change] DHCP Relay Agent, Bootup:132, Startup:0d5h20m48s ---------- 2 2017/10/14 12:04:11 <0> [Configuration Change] DHCP Relay Agent, Bootup:132, Startup:0d5h20m44s	
Error Messages	Severity level is out of range!	
	^Parse error	
	^Incomplete command	
Related Commands	logging event-log	

show email-warning config

Use the **show email-warning config** command to display the settings of the email warning.

Synopsis

show email-warning config

Option Description	email-warning	Display Email warning configuration
	config	Email warning configuration
Defaults	N/A	
Command Modes	Privileged EXEC /User EXEC	
Usage Guidelines	N/A	

Examples	`# show email-warning config`
	`Mail Server and Email Setup`
	`  SMTP Server IP/Name      :`
	`  SMTP Port                  25`
	`  Account Name             :`
	`  Account Password         :`
	
	`  1st email address :`
	`  2nd email address :`
	`  3rd email address :`
	`  4th email address :`	

Error Messages	^Parse error	
	^Incomplete command	
Related Commands	email-warning	

show logging-capacity

To check the logging capacity thresholds on the router, use the **show logging-capacity** command.

Synopsis

show logging-capacity

Option Description	logging-capacity	Specifies to display logging capacity threshold information.
Defaults	N/A	
Command Modes	Privileged EXEC / User EXEC	
Usage Guidelines	N/A	

Examples	`router # show logging-capacity`
	`Logging Capacity Threshold: 0%`
	`Logging Capacity Threshold Warning by Trap: On`
	`Logging Capacity Threshold Warning by Email: On`
	`Logging Capacity Oversize Action: Overwrite Oldest`	

Error Messages	^Parse error	
	^Incomplete command	
Related Commands	logging-capacity	

Tools

Port Mirror

Use **monitor** global configuration commands to enable the monitoring of data transmitted/received by a specific port. Use **no** form of this command to disable the monitoring.

Synopsis

(config)# **monitor** {**source interface** <mod-port> [{**both** | **tx** | **rx**}] | **destination interface** <port-id>}

(config)# **no monitor** {**source interface** | **destination interface**}

Option Description	source	Specifies monitored port(s)
	interface	Specifies which port is mirrored from or mirrored to.
	destination	Specifies the mirror port
	mod-port	Port ID (consists of module/port-number) or list. E.g. 1/1,2,3,2/1-3,5,...
	port-id	Port ID (consists of module/port-number)
	both	Specifies this option to monitor data packets both coming into, and being sent out
	tx	Specifies this option to monitor only those data packets being sent out
	rx	Specifies this option to monitor only those data packets coming into
Defaults	N/A	
Command Modes	Global configuration	
Usage Guidelines	• Traffic send/receive by a source port (Monitored port) will be mirrored to the destination port (Mirror port) • Multiple port selection is acceptable.	

Examples	Specify PORT8 and PORT9 to be monitored for both directions. All packets will be mirrored to PORT4:
	`router# configure`
	`router(config)# monitor source interface 1/8-9 both`
	`router(config)# monitor destination interface 1/4`
	`router(config)# exit`	

Error Messages	Monitored Port is the same with Mirror Port !!!	
	Invalid parameter	
	Warning !!! Mirror Port don't set !	
	Warning !!! Monitored Port don't set !	
	^Parse error	
	^Incomplete command	
Related Commands	show port monitor	

show port monitor

Use the **show port monitor** EXEC command to display the setting of the port mirror.

Synopsis

show port monitor

Option Description	port	Display Port configuration
	monitor	Display Port mirror configuration
Defaults	N/A	
Command Modes	Privileged EXEC / User EXEC	
Usage Guidelines	N/A	

Examples	`router# show port monitor`
	`Port Being Monitored Direction Mirror Port`
	`---------- ---------- ----------`
	`1/8 1/9 both 1/4`	

Error Messages	^Parse error	
	^Incomplete command	
Related Commands	monitor	

ping

Use the **ping** user EXEC command on the router to detect if the remote host is still alive.

Synopsis

ping <ip-address>

Option Description	ip-address	Ex. 192.168.127.1
Defaults	N/A	
Command Modes	Privileged	
Usage Guidelines	N/A	
Examples	`router# ping 192.168.127.1` `PING 192.168.127.1, Send/Recv/Lost = 4/4/0`	
Error Messages	^Parse error	
	^Incomplete command	
Related Commands	N/A	

tcpdump

Use the **tcpdump** privileged command on the router to capture layer-3 packets and display on the terminal.

Synopsis

tcpdump
[**-c** <count>| **-i** <interface> | -n] [<expression>]

Option Description	-c <count>	Exit after receiving count packets
	-i <interface>	Network interface to be used to capture packets. E.g. **eth0**
	-n	Do"t convert host addresses to names.
	expression	Common pcap-filter syntax
Defaults	N/A	
Command Modes	Privileged EXEC	
Usage Guidelines	• Typing **tcpdump** command and pressing enter will get a prompt message and then type applicable arguments. • Only incoming packets will be displayed on the terminal console.	

Examples	Capture and display incoming icmp packets.
	`router# tcpdump`
	`Please set tcpdump parsing parameter`
	`-i eth0 icmp`
	
	`Press ESC or q to exit tcpdump`
	`tcpdump: verbose output suppressed, use -v or -vv for full protocol decode`
	`listening on eth0, link-type EN10MB (Ethernet), capture size 262144 bytes`
	`01:15:50.760091 IP 192.168.127.1 > 192.168.127.254: ICMP echo request, id 1, seq 2282, length 40`
	`01:15:50.760035 IP 192.168.127.1 > 192.168.127.254: ICMP echo request, id 1, seq 2283, length 40`	

Error Messages	^Parse error	
	^Incomplete command	
Related Commands	N/A	

Network Services

DHCP

service dhcp

To enable the DHCP service, use the **service dhcp** global configuration command. To disable the DHCP service, use **no** form of this command.

Synopsis

(config)# **service dhcp** [**auto-assign**]

(config)# **no service dhcp**

Option Description	service dhcp	Enables DHCP server mode as DHCP/MAC-based assignment
	auto-assign	Enables DHCP server mode as Port-based IP assignment
Defaults	N/A	
Command Modes	Global configuration	
Usage Guidelines	N/A	

Examples	• Enable DHCP server mode to Port-based IP assignment.
	`router# configure`
	`router(config)# service dhcp auto-assign`
	`router(config)# exit`
	• Enable DHCP server mode to DHCP/MAC-based assignment.
	`router# configure`
	`router(config)# service dhcp`
	`router(config)# exit`
	• Disable DHCP server mode.
	`router# configure`
	`router(config)# no service dhcp`
	`router(config)# exit`	

Error Messages	^Parse error	
	^Incomplete command	
Related Commands	show ip dhcp show ip dhcp static show ip auto-assign show ip dhcp-relay ip dhcp pool ip dhcp static ip dhcp-relay interface ethernet	

ip dhcp pool

To create a DHCP pool for dynamic IP assignment, use the **ip dhcp pool** global configuration command and related sub-level configuration command sets. To remove the DHCP pool, use **no** form of this command.

Synopsis

Create / Remove a DHCP pool

(config)# **ip dhcp pool** <index>
(config)# **no ip dhcp pool** <index>

Set IP addresses in the pool

(dhcp-config)# **network** <first-ip> <last-ip> <netmask>

Set lease time

(dhcp-config)# **lease** <minutes>

Set DNS Server

(dhcp-config)# **dns-server** <dns-ip1><dns-ip2>

Set Default Gateway

(dhcp-config)# **default-router** <dr-ip>

Set NTP Server

(dhcp-config)# **ntp-server** <ntp-ip>

Save and Exit DHCP pool configuration

(dhcp-config)# **exit**

Enable / Disable the DHCP pool

(config)# **ip dhcp pool** <index> {**enable** | **disable**}

Option Description	index	Index of DHCP pools. This value should be created in sequence.
	lease	Specifies DHCP lease time.
	minutes	A number, ranges from 5 to 527039. Default is 60.
	network	Specifies a range of IP addresses in a DHCP pool.
	first-ip	The first IP address in a DHCP pool. Default is 0.0.0.0
	last-ip	The last IP address in a DHCP pool. Default is 0.0.0.0
	netmask	Netmask of a DHCP pool. Default is 0.0.0.0
	dns-server	Specifies DNS servers.
	dns-ip1	The IP address of the first DNS server. Default is 0.0.0.0
	dns-ip2	The IP address of the second DNS server. Default is 0.0.0.0
	default-router	Specifies the default router.
	dr-ip	The IP address of the default router. Default is 0.0.0.0
	ntp-server	Specifies the NTP server.
	ntp-ip	The IP address of the NTP server Default is 0.0.0.0
	exit	Commit new settings and exit sub-level configuration mode.
	enable	Enable specified <index> in the DHCP pool
	disable	Disable specified <index> in the DHCP pool
Defaults	Enabled.	
Command Modes	Global configuration, sub-level configuration	
Usage Guidelines	• Maximum number of pools is 32. • No modification function is provided. In case modification on a specific index is required, remove it first and then add a new setting. • Type a valid index to enter sub-level configuration mode.	

	• Specify **network** <first-ip> <last-ip> <netmask> first before setting **lease**, **dns-server**, **default-router** or **ntp-server**. Otherwise, error message **% Please configure offered network first** will be displayed. • Static IP assignment takes precedence over the dynamic IP assignment as well as DHCP relay agent. • Exit the sub-level configuration mode to let settings take effect.

Examples	Create a DHCP pool for dynamic IP assignment:
	
	Prerequisites:
	• TN router:
	- Interface LAN5: static IP = 192.168.5.254/24, VLAN ID=5;
	- PORT5: VLAN ID=5
	- DHCP server mode: Dynamic/Static IP assignment
	• Device(A) connected on PORT5:
	- IP: DHCP client
	
	Scenario:
	a) TN router DHCP pool settings:
	i. IP addresses: from 192.168.5.1 to 192.168.5.10
	ii. Netmask: 255.255.255.0
	iii. Lease time: 2880 minutes
	iv. Default gateway: 192.168.5.254
	v. DNS server 1: 8.8.8.8
	vi. DNS server 2: 192.168.8.8
	vii. NTP server: 192.168.8.9
	b) Device(A) can get an DHCP IP: 192.168.5.1 through PORT5.
	
	Commands:
	`router# configure`
	`router(config)# ip dhcp pool 1`
	`router(dhcp-config)# network 192.168.5.1 192.168.5.10 255.255.255.0`
	`router(dhcp-config)# lease 2880`
	`router(dhcp-config)# default-router 192.168.5.254`
	`router(dhcp-config)# dns-server 8.8.8.8 192.168.8.8`
	`router(dhcp-config)# ntp-server 192.168.8.9`
	`router(dhcp-config)# exit`

Error Messages	% Invalid parameter!
	% Please configure offered network first.
	^Parse error
	^Incomplete command
Related Commands	service dhcp ip dhcp static ip dhcp-relay interface ethernet show ip dhcp show ip dhcp static show ip auto-assign show ip dhcp binding show ip dhcp-relay

ip dhcp static

To assign a static DHCP IP address to a client device with a specific MAC address, use the **ip dhcp static** global configuration command. To remove the static IP assignment, use **no** form of this command.

Synopsis

Create / Remove a DHCP static IP

(config)# **ip dhcp static pool** <name>
(config)# **no ip dhcp static pool** <name>

Set the static IP address in the pool

(dhcp-config)# **host** <ip-addr> <netmask>

Set lease time

(dhcp-config)# **lease** <minutes>

Set MAC address

(dhcp-config)# **hardware-address** <mac-addr>

Set DNS Server

(dhcp-config)# **dns-server** <dns-ip1> <dns-ip2>

Set Default Gateway

(dhcp-config)# **default-router** <dr-ip>

Set NTP Server

(dhcp-config)# **ntp-server** <ntp-ip>

Save and Exit DHCP static configuration

(dhcp-config)# exit

Enable / Disable DHCP static IP configuration

(config)#)# **ip dhcp static pool** <name> {**enable** | **disable**}

Option Description	name	A name of the static IP assignment in the DHCP pool. Maximum length is 63.
	lease	Specifies DHCP lease time
	minutes	A number, ranges from 5 to 527039. Default is 60.
	host	Specifies the static IP address.
	ip-addr	Assigned IP address. Default is 0.0.0.0
	netmask	Netmask of the assigned IP address. Default is 0.0.0.0
	hardware-address	Specifies MAC address
	mac-addr	The MAC address of the selected device. Default is 00:00:00:00:00:00
	dns-server	Specifies DNS servers.
	dns-ip1	The IP address of the first DNS server. Default is 0.0.0.0
	dns-ip2	The IP address of the second DNS server. Default is 0.0.0.0
	default-router	Specifies the default router.
	dr-ip	The IP address of the default router. Default is 0.0.0.0
	ntp-server	Specifies the NTP server.
	ntp-ip	The IP address of the NTP server. Default is 0.0.0.0
	exit	Commit new settings and exit sub-level configuration mode.
	enable	Enable specified <name> in the DHCP pool
	disable	Disable specified <name> in the DHCP pool
Defaults	Enabled.	

Command Modes	Global configuration, sub-level configuration
Usage Guidelines	• Maximum number of static IP in the DHCP pool is 256. • Types a valid name to enter sub-level configuration mode to modify IP assignment settings. • Specify host <ip-addr> <netmask> first before setting **lease**, **hardware-address**, **dns-server**, **default-router** or **ntp-server**. Otherwise, error message **% Please configure host IP and netmask first** will be displayed. • Static IP assignment takes precedence over the dynamic IP assignment as well as DHCP relay agent. • Exits the sub-level configuration mode to let settings take effect.

Examples	Create a static IP assignment:
	
	Prerequisites:
	• TN router:
	- Interface LAN6: static IP = 192.168.6.254/24, VLAN ID=6
	- PORT6: VLAN ID=6
	- DHCP server mode: Dynamic/Static IP assignment
	• Device(A) connected on PORT6:
	- IP: DHCP client
	
	Scenario:
	a) TN router DHCP static IP settings:
	i. Name: P6-static
	ii. IP addresses: from 192.168.6.1
	iii. Netmask: 255.255.255.0
	iv. MAC address: 00:90:e8:00:f2:ac
	v. Lease time: 2880 minutes
	vi. Default gateway: 192.168.6.254
	vii. DNS server 1: 8.8.8.8
	viii. DNS server 2: 192.168.8.8
	ix. NTP server: 192.168.8.9
	b) Device(A) can get an DHCP IP: 192.168.6.1 through PORT6.
	
	Commands:
	`router# configure`
	`router(config)# ip dhcp static pool P6-static`
	`router(dhcp-config)# host 192.168.6.1 255.255.255.0`
	`router(dhcp-config)# lease 2880`
	`router(dhcp-config)# hardware-address 00:90:e8:00:f2:ac`
	`router(dhcp-config)# default-router 192.168.6.254`
	`router(dhcp-config)# dns-server 8.8.8.8 192.168.8.8`
	`router(dhcp-config)# ntp-server 192.168.8.9`
	`router(dhcp-config)# exit`

Error Messages	^Parse error
	^Incomplete command
	% Please configure host IP and netmask first.
Related Commands	service dhcp ip dhcp pool ip dhcp-relay interface ethernet show ip dhcp show ip dhcp static show ip auto-assign show ip dhcp binding show ip dhcp-relay

ip dhcp-relay

To enable a DHCP relay agent, use the **ip dhcp-relay** global configuration command. To disable DHCP relay agent, use **no** form of this command.

Synopsis

(config)# **ip dhcp-relay** {**server** {**interface** <if-name> |
<server-index> <server-ip>} |
option82 [{**remote-id-type** {ip |
mac |
client-id |
other} |
man-id <manual-id>}]}

(config)# **no ip dhcp-relay** {**server** {**interface** |
<server-index1>} |
option82}

Option Description	server	Specifies an interface to relay DHCP message to a DHCP server or DHCP servers
	interface	Specifies an interface to relay DHCP message to a DHCP server
	if-name	Valid interface name
	server-index	Index ranges from 1 to 4
	server-ip	IP addresses of DHCP server.
	option82	Specifies DHCP option 82
	remote-id-type	Specifies one of WAN-IP/MAC/Client-ID/Other types
	ip	WAN interface IP address
	mac	MAC address
	client-id	Uses a combination of the switch's MAC address and IP address as the remote ID
	other	Uses string specified by <manual-id>
	man-id	Specifies the user-designated ID
	manual-id	User-designated ID. Maximum length is 32.
	server-index1	Index ranges from 0 to 3
Defaults	N/A	
Command Modes	Global configuration	
Usage Guidelines	• If dynamic/static IP assignment or IP-port binding is specified, DHCP relay agent will not take effect in this case. • Static IP assignment takes precedence over the dynamic IP assignment as well as DHCP relay agent.	
Examples	DHCP relay agent: Prerequisites: • TN router: - LAN6: 192.168.6.252/24, VLAN ID=6, interface used for DHCP clients - LAN8: 192.168.8.252/24, VLAN ID=8, interface used for the DHCP server • Device(A) on subnet 192.168.6.0/24: - IP: DHCP client • DHCP Server on subnet 192.168.8.0/24: - IP: 192.168.8.20/24 - Server settings: 1) IP pool: 192.168.6.11 to 192.168.6.15 2) Circuit-ID: 0x01000606 3) Remote-ID: 0x31323334	

	Network topology:
	 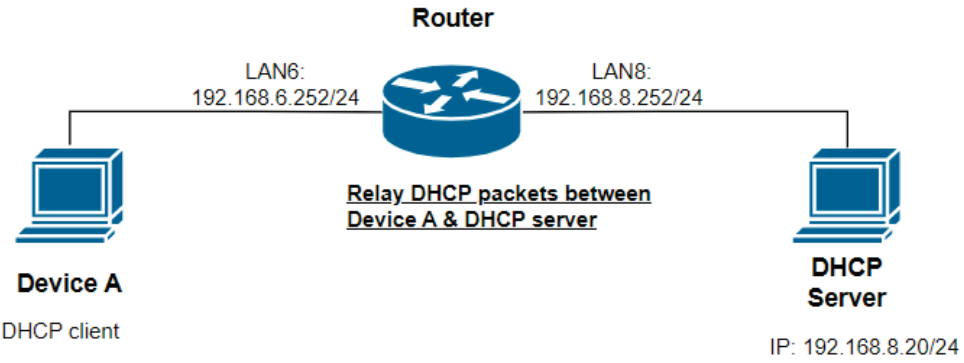
	
	Scenario:
	a) Device(A) send DHCP DISCOVER packet to the router. Then the router will add a relay agent IP address and replace source IP and destination IP to the packet and forward it to the DHCP server.
	b) A DHCP server replies DHCP OFFER packet to the router and the router sends the packet to Device(A).
	
	Commands:
	`router# configure`
	`router(config)# ip dhcp-relay server interface LAN8`
	`router(config)# ip dhcp-relay server 1 192.168.8.20`
	`router(config)# ip dhcp-relay option82`
	`router(config)# ip dhcp-relay option82 remote-id-type other`
	`router(config)# ip dhcp-relay option82 man-id 1234`
	`router(config)# interface ethernet 1/6`
	`router(config-if)# ip dhcp-relay`
	`router(config-if)# exit`
	`router(config)#`

Error Messages	% Invalid parameter!
	% Invalid outbound Interface Name.
	% Please configure offered network first.
	^Parse error
	^Incomplete command
Related Commands	service dhcp ip dhcp static ip dhcp pool interface ethernet show ip dhcp show ip dhcp static show ip auto-assign show ip dhcp binding show ip dhcp-relay

interface ethernet ip

To assign a static DHCP IP address to a client device by using IP-port binding function, use the **interface ethernet** global configuration command and **ip** sub-level configuration command sets. To remove IP-port binding settings or disable dhcp-relay, use the **no** form of this command.

Synopsis

Enter into the sub-level command mode to configure IP-port binding related settings

(config)# **interface ethernet** <mod-port>

Set the IP address of the specified Port / Remove the IP address

(config-if)# **ip auto-assign** <ip-addr> <netmask>
(config-if)# **no ip auto-assign**

Set DNS Server

(config-if)# **ip dns-server** <dns-ip1> <dns-ip2>

Set Default Gateway

(config-if)# **ip default-router** <dr-ip>

Set NTP Server

(config-if)# **ip ntp-server** <ntp-ip>

Set lease time

(config-if)# **ip lease** <minutes>

Enable / Disable Option-82 for DHCP relay agent on specified Port

(config-if)# **ip dhcp-relay**
(config-if)# **no ip dhcp-relay**

Option Description	mod-port	Port ID (consists of module/port-number) or list. E.g. 1/1,2,3,2/1-3,5,...
	Ip	Specifies IP-port binding or enables dhcp-relay function
	auto-assign	Specifies IP address and netmask for the connected device
	ip-addr	The IP address to be assigned to the device.
	netmask	Netmask
	dns-server	Specifies DNS servers.
	dns-ip1	The IP address of the first DNS server.
	dns-ip2	The IP address of the second DNS server.
	default-router	Specifies the default router.
	dr-ip	The IP address of the default router.
	ntp-server	Specifies the NTP server.
	ntp-ip	The IP address of the NTP server
	lease	Specifies DHCP lease time
	minutes	A number, ranges from 5 to 527039
	dhcp-relay	Specifies to enable/disable dhcp-relay function.
Defaults	N/A	
Command Modes	Global configuration, sub-level configuration	
Usage Guidelines	• Maximum number of port-based IP pool is 16. • IP-port binding takes precedence over DHCP relay agent.	
Examples	Create a port-based IP assignment: Prerequisites: • TN router: - Interface LAN7: static IP = 192.168.7.252/24, VLAN ID=7 - PORT7: VLAN ID=7 - DHCP server mode: IP-port binding	

	• Device(A) connected on PORT7:
	- IP: DHCP client
	
	Scenario:
	a) TN router DHCP port-based IP settings:
	i. IP addresses: from 192.168.7.22
	ii. Netmask: 255.255.255.0
	iii. Lease time: 1440 minutes
	iv. Default gateway: 192.168.7.252
	v. DNS server 1: 8.8.8.8
	vi. DNS server 2: 192.168.8.8
	vii. NTP server: 192.168.8.9
	b) Device(A) can get an DHCP IP: 192.168.7.22 through PORT7.
	
	Commands:
	`router# configure`
	`router(config)# interface ethernet 1/7`
	`router(config-if)# ip auto-assign 192.168.7.22 255.255.255.0`
	`router(config-if)# ip lease 1440`
	`router(config-if)# ip ntp-server 192.168.8.9`
	`router(config-if)# ip default-router 192.168.7.252`
	`router(config-if)# ip dns-server 8.8.8.8 192.168.8.8`
	`router(config-if)# exit`

Error Messages	% Illegal parameter
	^Parse error
	^Incomplete command
Related Commands	service dhcp ip dhcp pool ip dhcp static ip dhcp-relay interface ethernet show ip dhcp show ip dhcp static show ip auto-assign show ip dhcp binding show ip dhcp-relay

show ip dhcp

To check the DHCP static or dynamic client list on the router, use the **show ip dhcp** command.

Synopsis

show ip dhcp [{**static** | **binding**}]

Option Description	ip dhcp	Specifies to display DHCP client list information
	static	Specifies to display static DHCP client list
	binding	Specifies to display dynamic DHCP client list
Defaults	N/A	
Command Modes	Privileged EXEC / User EXEC	
Usage Guidelines	N/A	

Examples	• Display static DHCP client list.
	`router # show ip dhcp static`
	`Static DHCP Pool List`
	`----------`
	`Name : P6-static State : Enable`
	`Host IP Address : 192.168.6.1 Host Netmask : 255.255.255.0`
	`MAC Address : 00:90:E8:00:F2:AC Lease Time(min): 2880`
	`Default Gateway : 192.168.6.254 NTP Server : 192.168.8.9`
	`DNS Server 1 : 8.8.8.8 DNS Server 2 : 192.168.8.8`
	`----------`
	• Display dynamic DHCP client list.
	`router # show ip dhcp binding`
	`Name MAC Address IP Address Time Left`
	`---------- ---------- ---------- ----------`
	`Moxa-1 00:90:e8:00:00:41 192.168.5.1 44 h: 34 m: 25 s`	

Error Messages	^Parse error	
	^Incomplete command	
Related Commands	ip dhcp static interface ethernet ip	

show ip auto-assign

To check the port-based IP pool list information on the router, use the **show ip auto-assign** command.

Synopsis

show ip auto-assign

Option Description	ip auto-assign	Specifies to display port-based IP pool list information
Defaults	N/A	
Command Modes	Privileged EXEC / User EXEC	
Usage Guidelines	N/A	
Examples	router# show ip auto-assign Port-based IP Pool List ---------- Port : 7 State : Enable Static IP Address : 192.168.7.22 Netmask : 255.255.255.0 Lease Time(min) : 1440 Default Gateway : 192.168.7.252 NTP Server : 192.168.8.9 DNS Server 1 : 8.8.8.8 DNS Server 2 : 192.168.8.8 ----------	
Error Messages	^Parse error	
	^Incomplete command	
Related Commands	ip dhcp static interface ethernet ip	

show ip dhcp-relay

To check the DHCP relay settings on the router, use the **show ip dhcp-relay** command.

Synopsis

show ip dhcp-relay

Option Description	ip dhcp-relay	Specifies to display DHCP-relay information
Defaults	N/A	
Command Modes	Privileged EXEC / User EXEC	
Usage Guidelines	N/A	

Examples	router# show ip dhcp-relay
	DHCP Relay Agent Setting
	  Interface : LAN8
	  1st server IP : 192.168.8.20
	  2nd server IP : 0.0.0.0
	  3rd server IP : 0.0.0.0
	  4th server IP : 0.0.0.0
	DHCP Relay Option 82: Enable
	  Remote ID type : Other
	  Remote ID value : 1234
	(null) : 31323334
	DHCP Fucntion Table
	Port Circuit-ID Option 82
	----- ---------- ----------
	1/1 01000801 Disable
	1/2 01000102 Disable
	1/3 01000503 Disable
	1/4 01000804 Disable
	1/5 01000505 Disable
	1/6 01000606 Enable
	1/7 01000107 Disable
	1/8 01000808 Disable
	1/9 01000109 Disable
	1/10 0100010A Disable
	1/11 0100080B Disable
	1/12 0100010C Disable
	1/13 0100010D Disable
	1/14 0100010E Disable
	1/15 0100010F Disable
	1/16 01000110 Disable	

Error Messages	^Parse error	
	^Incomplete command	
Related Commands	ip dhcp static interface ethernet ip	

Dynamic DNS

ip ddns

To enable the DDNS service, use the **ip ddns** global configuration command. To disable DDNS service, use the **no** form of this command.

Synopsis

(config)# **ip ddns** {**service** {**freedns** |
3322 |
dyndns |
no-ip} |
username <user-name> |
password <pwd> |
domain <domain-name>}

(config)# **no ip ddns**

Option Description	service	Specifies a DDNS service
	freedns	DDNS service: freedns
	3322	DDNS service: 3322
	dyndns	DDNS service: dyndns
	no-ip	DDNS service: no-ip
	username	Specifies the DDNS server's user name
	user-name	DDNS server's user name
	password	Specifies the DDNS server's password
	pwd	DDNS server's password
	domain	Specifies domain name for DDNS service
	domain-name	DDNS server's domain name
Command Modes	Global configuration	
Usage Guidelines	N/A	

Examples	Configure freedns ddns service.
	`router# configure`
	`router(config)# ip ddns service freedns`
	`router(config)# ip ddns username demo-user`
	`router(config)# ip ddns password demo-password`
	`router(config)# ip ddns domain domain-name router(config)# exit`	

Error Messages	% Password Length should <= 45	
	% Server Name Error	
	^Parse error	
	^Incomplete command	
Related Commands	show ip ddns	

show ip ddns

To check the Dynamic DNS settings on the router, use the **show ip ddns** command.

Synopsis

show ip ddns

Option Description	ip ddns	Specifies to display DDNS information
Defaults	N/A	
Command Modes	Privileged EXEC / User EXEC	
Usage Guidelines	N/A	

Examples	`router # show ip ddns`
	`DDNS`
	`  Service : no-ip`
	`  Server Name :`
	`  User Name : demo-user`
	`  Password : *********`
	`  Domain Name :`	

Error Messages	^Parse error	
	^Incomplete command	
Related Commands	ip ddns	

Other Commands

terminal

Use the **terminal** privileged command on the router to configure terminal page length.

Synopsis

terminal {**length** <number> |
default}

Option Description	length	Specifies terminal page length
	number	0 or 20-100, 0: Unlimited
	default	Resets the Terminal Length to Default, default length: 20
Defaults	20	
Command Modes	Privileged EXEC	
Usage Guidelines	N/A	
Examples	N/A	
Error Messages	Page Length should be between 20 and 100	
	^Parse error	
	^Incomplete command	
Related Commands	N/A	

package

Use the **package** privileged command on the router to install/upgrade packages such as Network Security Package or MXsecurity Agent Package.

Synopsis

package {**install** | **upgrade**} <pkg-name> {**firmware** | **tftp** <ip> <filename>}

Option Description	install	Specifies to install designated package
	upgrade	Specifies to upgrade designated package
	pkg-name	One of the package names {security | mxsecurity}
	firmware	Specifies to use the package prebuilt in the firmware
	tftp	Specifies to use the package located on a remote TFTP server
	ip	IP address
	filename	The filename of the designated package
Defaults	N/A	
Command Modes	Privileged EXEC	
Usage Guidelines	• <pkg-name> is case-sensitive. • If the package is already present, utilize the "upgrade" command instead of the "install" command. • Given that firmware and packages are handled separately, if the current package is incompatible with the new firmware, the existing package will be unloaded. You'll then need to download a new package and install it on the router.	

Examples	• Upgrade security package via TFTP
	`router# package upgrade security tftp 192.168.127.102 Security_TN-4900_V7.0.12_Build_23081018.pkg`
	`Upgrade security package(Security_TN-4900_V7.0.12_Build_23081018.pkg) from TFTP Server IP 192.168.127.102`
	`Package transfering...`
	`Verified OK`
	`Checking Package...Package is importing now, please wait!`
	`All checking are ok.`
	
	`Package upgrade successfully.`
	`router#`
	
	• Upgrade security package via built-in firmware
	`router# package upgrade security firmware`
	`Upgrade to security buildin package`
	
	`Buildin package upgrade successfully.`
	`router#`	

Error Messages	% You do not have admin privilege	
	Buildin package install failed.(ERROR CODE: 1)	
	Upgrade failed.(ERROR CODE: 1)	
	Uninstall failed, package is not support uninstall.	
	Buildin package install failed, package is already installed.	
	^Parse error	
	^Incomplete command	
Related Commands	show package	

show package status

Use the **show package status** command on the router to display the status of installed packages.

Synopsis

show package status

Option Description	package status	Specifies to display the status of installed packages
Defaults	N/A	
Command Modes	Privileged EXEC	
Usage Guidelines	N/A	

Examples	Display status of installed packages.
	`router# show package status`
	
	`Package security is enable.(v7.0.0011)`
	
	`Package mxsecurity is enable.(v2.0.0012)`
	`router#`	

Error Messages	^Parse error	
	^Incomplete command	
Related Commands	package	

moxasupport

Use the **moxasupport** command on the router to activate engineering mode for troubleshooting when it is necessary. To disable moxasupport, use the **no** form of this command.

Synopsis

moxasupport <secret-seed>

no moxasupport

Option Description	secret-seed	A set of characters without a whitespace. The length must range from 4 to 8.
Defaults	Disabled	
Command Modes	Privileged EXEC	
Usage Guidelines	• This command is exclusively intended for troubleshooting by Moxa staff. • The engineering mode will be disabled after system reboot. • The <secret-seed> will become invalid after the next reboot . • CLI command “show moxasupport” displays default status.	

Examples	Instructions for setting up the environment for remote troubleshooting by Moxa's staff.
	
	Step 1: Enter CLI Privileged EXEC mode and issue below command. Please be aware that "1234" followed by "moxasupport" is a temporary one-time seed passphrase for login purposes.
	`router# moxasupport 1234`
	`router#`
	
	Step 2: Arrange a remote session to allow Moxa staff to troubleshoot the router through either the console port or SSH.	

Error Messages	^Parse error	
	^Incomplete command	
Related Commands	N/A	

show integrity

Use the **show integrity** command on the router to check configuration and application integrity.

Synopsis

show integrity

Option Description	integrity	Specifies to check configuration and application integrity
Defaults	N/A	
Command Modes	Privileged EXEC / User EXEC	
Usage Guidelines	Whenever configuration or application changes in a normal operation, the router will calculate the hash and keep it as a record. Users can verify the integrity status of configurations or applications by entering this CLI command. The router will recalculate the hash and compare it against the previously recorded value.	

Examples	Display status of integrity check.
	`router # show integrity`
	`Application: OK`
	`Configuraion: OK`
	`router #`	

Error Messages	^Parse error	
	^Incomplete command	
Related Commands	N/A	

license activation

Use the **license activation** privileged command to activate a specific function such as IPS on the router.

Synopsis

(config)# **license activation** <code>

Option Description	code	Activation code
Defaults	N/A	
Command Modes	Privileged EXEC	
Usage Guidelines	Apply and download the activation code from Moxa's site in advance.	
Examples	N/A	
Error Messages	% cparser_cmd_config_license_activation_code: L43 Invalid activation code!	
	^Parse error	
	^Incomplete command	
Related Commands	N/A	

show license

Use the **show license** command on the router to provide an overview of installed license and historical information.

Synopsis

show license {**overview** | **history**} <feature-id>

Option Description	license	Specifies to display license information
	overview	Specifies to display overview information
	history	Specifies to display historical information
	feature-id	Feature ID starting from 1
Defaults	N/A	
Command Modes	Privileged EXEC / User EXEC	
Usage Guidelines	Whenever configuration or application changes in a normal operation, the router will calculate the hash and keep it as a record. Users can verify the integrity status of configurations or applications by entering this CLI command. The router will recalculate the hash and compare it against the previously recorded value.	

Examples	Display license overview information
	`router# show license overview 1`
	
	`License Overview:`
	`  Name  : IPS-DEVICE`
	`  Valid Duration  : 11066 days`
	`  Start Date  : 2022-04-01 08:20:00`
	`  End Date  : 2053-12-08 02:06:40`
	`  Status  : Valid`	

Error Messages	% Invalid feature ID!	
	^Parse error	
	^Incomplete command	
Related Commands	N/A	

2. Interface and Routing Functions

This chapter describes the interface and routing functions of the Ethernet switches.

Command Modes

Refer to the following table for the command mode descriptions.

Mode	Access Method	Prompt	Exit Method	About This Mode
User EXEC	Begin a session with your router by using a normal user account and password.	#	Enter **exit** or **quit**.	Use this mode to • Change terminal settings. • Perform basic tests. • Display system information.
Privileged EXEC	Begin a session with your router by using an admin type user account and password.	#	Enter **exit** or **quit**.	Use this mode to • Change terminal settings. • Perform basic tests. • Display system information. • Enter configuration mode.
Global configuration	While in privileged EXEC mode, enter the **configure** command.	(config)#	To exit to privileged EXEC mode, enter **exit**.	First level to configure main router functions.
Sub-level configuration	While in global configuration mode, use for example **interface lan** command and press enter	(config-if)#	To exit to global configuration mode, enter **exit**.	A sub-level to configure for example LAN interface related arguments.

Command Sets

Interfaces

LAN (using management VLAN)

Information described in this chapter is only applied to the LAN interface which management VLAN belongs to. For the rest LAN interface configuration, please refer to the chapter LAN (non-management VLAN).

interface lan name

To change the name of this LAN interface, use the **interface lan** global configuration command and **name** sub-level configuration command. To exit sub-level configuration mode, use **exit** command.

Synopsis

(config)# **interface lan**
(config-if)# {**name** <if-name> |
exit}

Option Description	name	Specifies the name of LAN interface
	if-name	The name of LAN interface
	exit	Commit new settings and exit sub-level configuration mode.
Defaults	N/A	
Command Modes	Global configuration, sub-level configuration	
Usage Guidelines	This command only applies to LAN interface using the management VLAN.	

Examples	Change interface name to LAN-M.
	`router# configure`
	`router(config)# interface lan`
	`router(config-if)# name LAN-M`
	`router(config-if)# exit`	

Error Messages	% is over length. It must be 1 - 12.	
	^Parse error	
	^Incomplete command	
Related Commands	show interfaces lan	

interface lan ip address

To configure static IP for LAN interface, use the **interface lan** global configuration command and **ip address static** sub-level configuration command. To return to default settings, use the **no** form of this command.

Synopsis

(config)# **interface lan**
(config-if)# **ip address static** <lan-ip> <netmask>

(config-if)# **no ip address**

Option Description	static	Specifies static IP address
	lan-ip	IP address
	netmask	Netmask of the static IP address
Defaults	IP address of default LAN is 192.168.127.254	
Command Modes	Global configuration, sub-level configuration	
Usage Guidelines	• This command only applies to LAN interface using the management VLAN.. • DHCP option is not applicable to this entry LAN interface.	

Examples	Change the IP address (192.168.127.253) and netmask (255.255.255.0) of the interface.
	`router# configure`
	`router(config)# interface lan`
	`router(config-if)# ip address static 192.168.127.254 255.255.255.0`
	`router(config-if)# exit`	

Error Messages	N/A	
Related Commands	show interface lan	

interface lan ip ospf

To configure dynamic routing with OSPF interface settings and auth type for LAN, use the **interface lan** global configuration command and **ip ospf** sub-level configuration command sets. To return to the default settings, use the **no** form of this command.

Synopsis

(config)# **interface lan**
(config-if)# **ip ospf** {**cost** <metric> |
priority <pri-number> |
hello-interval <h-second> |
dead-interval <d-second> |
auth {**simple auth-key** <key-string>|
md5 <key-id> **auth-key** <md5-key-string>} |
area <area-id>}

(config-if)# **no ip ospf** [{**cost** |
priority |
hello-interval |
dead-interval |
auth}]

Option Description	cost	Specifies Metric/Cost of OSPF
	metric	Metric/Cost of OSPF. Ranges from 1 to 65535.
	priority	Specifies router's priority
	pri-number	Priority. Ranges from 0 to 255.
	hello-interval	Specifies Hello packets which are packets that an OSPF process sends to its OSPF neighbors to maintain connectivity with those neighbors.
	h-second	Interval of hello packets. Ranges from 1 to 65535 seconds.
	dead-interval	Specifies the dead-interval
	d-second	Interval of dead packets. Ranges from 1 to 65535 seconds.
	auth	Enables or disables auth function
	simple auth-key	Specifies simple auth type
	key-string	A key string for simple auth type. Maximum string length is 8.
	md5	Specifies MD5 auth type
	key-id	A key ID for MD5 hash calculation. Ranges from 1 to 255.
	auth-key	Specifies MD5 key for hash
	md5-key-string	A key string for MD5 auth type. Maximum string length is 8.
	area	Specifies the area ID
	area-id	An area ID
Defaults	• metric : 1 • h-interval : 10 • d-interval : 40 • pri-number : 1	
Command Modes	Global configuration, sub-level configuration	
Usage Guidelines	This command only applies to LAN interface using the management VLAN.	

Examples	• Specify Auth type to "none".
	`router# configure`
	`router(config)# interface lan`
	`router(config-if)# no ip ospf auth`
	`router(config-if)# exit`
	`router(config)# exit`
	
	• Delete OSPF LAN interface.
	`router# configure`
	`router(config)# interface lan`
	`router(config-if)# no ip ospf`
	`router(config-if)# exit`
	`router(config)# exit`	

	• Return hello interval to default.
	`router# configure`
	`router(config)# interface lan`
	`router(config-if)# no ip ospf hello-interval`
	`router(config-if)# exit`
	`router(config)# exit`
	* An illustrative example can be found in the chapter "Unicast Route".

Error Messages	% Priority must be 0 - 255
	% MD5 Key ID must be 1 - 255
	% Please bind WAN VLAN ID first.
	% Metric must be 1 - 65535
	% Hello Interval must be 1 - 65535
	% Dead Interval must be 1 - 65535
	% Auth Key lengths up to 8 characters
	^Parse error
	^Incomplete command
Related Commands	route ospf show interfaces lan

interface lan ip directed-broadcast

To enable directed broadcast for LAN interface, use the **interface lan** global configuration command and **ip directed-broadcast** sub-level configuration command. To disable directed broadcast, use the **no** form of this command.

Synopsis

(config)# **interface lan**
(config-if)# **ip directed-broadcast** [**source-ip**]

(config-if)# **no ip directed-broadcast**

Option Description	directed-broadcast	Enables directed broadcast feature.
	source-ip	Specifies to overwrite source IP
Defaults	Directed broadcast is disabled by default.	
Command Modes	Global configuration, sub-level configuration	
Usage Guidelines	• This command only applies to LAN interface using the management VLAN. • This feature supports directed broadcast for UDP packets only; ICMP is not included.	

Examples	Enable directed broadcast.
	`router# configure`
	`router(config)# interface lan`
	`router(config-if)# ip directed-broadcast`
	`router(config-if)# exit`	

Error Messages	N/A	
Related Commands	show ip directed-broadcast	

interface lan bind vlan

To specify/modify the management VLN for LAN interface, use the **interface lan** global configuration command and **bind vlan** sub-level configuration command. To return management VLAN to default value, use the **no** form of this command.

Synopsis

(config)# **interface lan**
(config-if)# **bind vlan** <vlan-id>

(config-if)# **no bind vlan**

Option Description	bind vlan	Specifies to bind management VLAN
	vlan-id	Ranges from 1 to 4094.
Defaults	Default management VLAN ID is 1.	
Command Modes	Global configuration, sub-level configuration	
Usage Guidelines	• ▪ This command only applies to LAN interface using the management VLAN. • ▪ Make sure the VLAN ID is created in advance before using it.	

Examples	Specify management VLAN ID (2).
	`router# configure`
	`router(config)# interface lan`
	`router(config-if)# bind vlan 2`
	`router(config-if)# exit`	

Error Messages	^Parse error	
	^Incomplete command	
Related Commands	show interfaces lan	

interface lan mac-address

To configure virtual MAC address to LAN interface, use the **interface lan** global configuration command and **mac-address** sub-level configuration command. To return virtual MAC address to default, use the **default** argument of this command.

Synopsis

(config)# **interface lan**
(config-if)# **mac-address** {<mac-addr> |
default}

Option Description	mac-address	The virtual MAC address.
	default	Return to default value 00:00:00:00:00:00
Defaults	00:00:00:00:00:00	
Command Modes	Global configuration, sub-level configuration	
Usage Guidelines	This command only applies to LAN interface using the management VLAN.	

Examples	Specify the virtual MAC (00:90:e8:12:34:56) to the interface using management VLAN.
	`router# configure`
	`router(config)# interface lan`
	`router(config-if)# mac-address 00:90:e8:12:34:56`
	`router(config-if)# exit`	

Error Messages	^Parse error	
	^Incomplete command	
Related Commands	show interfaces lan	

show interfaces lan

To check the status of the default LAN interface, use the **show interfaces lan** command.

Synopsis

show interfaces lan

Option Description	interfaces	Interface status and configuration
	lan	Specifies default LAN interface
Defaults	N/A	
Command Modes	Privileged EXEC / User EXEC	
Usage Guidelines	N/A	

Examples	`router# show interfaces lan`
	`Management VLAN ID  : 1`
	`LAN IP              : 192.168.127.254`
	`LAN Netmask         : 255.255.255.0`	

Error Messages	^Parse error	
	^Incomplete command	
Related Commands	interface lan	

show ip directed-broadcast

To check the directed broadcast settings of LAN or WAN interfaces on the router, use the **show ip directed-broadcast** command.

Synopsis

show ip directed-broadcast

Option Description	ip directed-broadcast	Specifies to display directed broadcast settings
Defaults	N/A	
Command Modes	Privileged EXEC / User EXEC	
Usage Guidelines	N/A	

Examples	`router 0# show ip directed-broadcast`
	`Interface        Directed Broadcast    Source IP Overwrite`
	`---------------  --------------------  --------------------`
	`WAN              Disable               Disable`
	`LAN20            Enable                Disable`	

Error Messages	^Parse error	
	^Incomplete command	
Related Commands	ip directed-broadcast	

LAN (using non-management VLAN)

Information described in this chapter is only applied to the LAN interface which management VLAN belongs to. For the rest LAN interface configuration, please refer to the chapter LAN (non-management VLAN).

interface vlan shutdown

To change the name of this LAN interface, use the **interface vlan** global configuration command and **name** sub-level configuration command. To exit sub-level configuration mode, use **exit** command.

Synopsis

(config)# **interface vlan** <vlan-id>
(config-vif)# {**name** <if-name> |
exit |
shutdown}

(config-vif)# **no shutdown**

Option Description	vlan-id	Ranges from 1 to 4094.
	name	Specifies the name of LAN interface
	if-name	The name of LAN interface
	exit	Commit new settings and exit sub-level configuration mode.
	shutdown	Disables the LAN interface with selected VLAN ID.
Defaults	N/A	
Command Modes	Global configuration, sub-level configuration	
Usage Guidelines	• This command only applies to LAN interface using the non-management VLAN. • The IP address of the LAN interface should be configured before using this command. • Make sure the VLAN ID is created in advance before using it.	

Examples	Modify existing interface name from LAN2 to LAN2a and disable it for now.
	`router# configure`
	`router(config)# interface vlan 2`
	`router(config-vif)# name LAN2a`
	`router(config-vif)# shutdown`
	`router(config-vif)# exit`	

Error Messages	% is over length. It must be 1 - 13.	
	vlan id does not exist!!	
	% Interface not exist! Please create interface and set ip and netmask first	
	^Parse error	
	^Incomplete command	
Related Commands	show interface vlan	

no interface vlan

To remove a specific LAN interface with a specific VLAN ID, use the **no interface vlan** global configuration command.

Synopsis

(config)# **no interface vlan** <vlan-id>

Option Description	vlan-id	VLAN ID to be removed.
Defaults	N/A	
Command Modes	Global configuration	
Usage Guidelines	• Range of VLAN ID is 1 to 4094. • Make sure the VLAN ID has been assigned to a LAN interface in advance.	

Examples	Remove the interface which binds VLAN ID (5) from the router.
	`router# configure`
	`router(config)# no interface vlan 5`
	`router(config)# exit`	

Error Messages	% interface vlan is not exist	
	^Parse error	
	^Incomplete command	
Related Commands	show interface vlan	

interface vlan ip address

To configure a static IP address or a secondary IP address for LAN interface, use the **interface vlan** global configuration command and **ip address** sub-level configuration command. To remove a secondary IP address, use the **no** form of this command.

Synopsis

(config)# **interface vlan** <vlan-id>
(config-vif)# **ip address** <ip> <netmask> [**secondary**]

(config-vif)# **no ip address** <ip> <netmask> **secondary**

Option Description	vlan-id	Ranges from 1 to 4094.
	ip	IP address
	netmask	Netmask of the static IP address
	secondary	Specifies a secondary IP address
Defaults	N/A	
Command Modes	Global configuration, sub-level configuration	
Usage Guidelines	• This command only applies to LAN interface using the non-management VLAN. • Make sure the VLAN ID is created in advance before using it.	

Examples	• Create LAN3's interface IP 30.0.0.1 and a secondary IP 30.0.0.2.
	`router# configure`
	`router(config)# interface vlan 3`
	`router(config-vif)# ip address 30.0.0.1 255.255.255.0`
	`router(config-vif)# ip address 30.0.0.2 255.255.255.0 secondary`
	`router(config-vif)# name LAN3`
	`router(config-vif)# no shutdown`
	`router(config-vif)# exit`
	`router(config)# exit`
	• Remove secondary IP 30.0.0.2 of LAN3.
	`router# configure`
	`router(config)# interface vlan 3`
	`router(config-vif)# no ip address 30.0.0.2 255.255.255.0 secondary`
	`router(config-vif)# exit`
	`router(config)# exit`	

Error Messages	% Invalid parameter!	
	vlan id does not exist!!	
	% Interface is not dynamic IP mode	
	% No match entry for Secondary IP, mask in the VLAN	
	^Parse error	
	^Incomplete command	
Related Commands	show interface vlan	

interface vlan ip ospf

To configure dynamic routing with OSPF interface settings and auth type for LAN, use the **interface vlan** global configuration command and **ip ospf** sub-level configuration command. To return to the default settings, use the **no** form of this command.

Synopsis

(config)# **interface vlan** <vlan-id>
(config-vif)# **ip ospf** {**cost** <metric> |
priority <pri-number> |
hello-interval <h-second> |
dead-interval <d-second> |
auth {**simple auth-key** <key-string>|
md5 <key-id> **auth-key** <md5-key-string>} |
area <area-id>}

(config-vif)# **no ip ospf** [{**cost** |
priority |
hello-interval |
dead-interval |
auth}]

Option Description	vlan-id	Ranges from 1 to 4094.
	cost	Specifies Metric/Cost of OSPF
	metric	Metric/Cost of OSPF. Ranges from 1 to 65535.
	priority	Specifies router's priority
	pri-number	Priority. Ranges from 0 to 255.
	hello-interval	Specifies Hello packets which are packets that an OSPF process sends to its OSPF neighbors to maintain connectivity with those neighbors.
	h-second	Interval of hello packets. Ranges from 1 to 65535 seconds.
	dead-interval	Specifies the dead-interval
	d-second	Interval of dead packets. Ranges from 1 to 65535 seconds.
	auth	Enables or disables auth function
	simple auth-key	Specifies simple auth type
	key-string	A key string for simple auth type. Maximum string length is 8.
	md5	Specifies MD5 auth type
	key-id	A key ID for MD5 hash calculation. Ranges from 1 to 255.
	auth-key	Specifies MD5 key for hash
	md5-key-string	A key string for MD5 auth type. Maximum string length is 8.
	area	Specifies the area ID
	area-id	An area ID
Defaults	• metric : 1 • h-interval : 10 • d-interval : 40 • pri-number : 1	
Command Modes	Global configuration, sub-level configuration	
Usage Guidelines	• This command only applies to LAN interface using the non-management VLAN. • Make sure the VLAN ID is created in advance before using it.	

Examples	• Specify Auth type to "none" with LAN interface (VLAN ID=3).
	`router# configure`
	`router(config)# interface vlan 3`
	`router(config-vif)# no ip ospf auth`
	`router(config-vif)# exit`
	`router(config)# exit`
	• Delete OSPF WAN interface.
	`router# configure`
	`router(config)# interface vlan 3`
	`router(config-vif)# no ip ospf`
	`router(config-vif)# exit`
	`router(config)# exit`	

	• Return hello interval to default.
	`router# configure`
	`router(config)# interface vlan 3`
	`router(config-vif)# no ip ospf hello-interval`
	`router(config-vif)# exit`
	`router(config)# exit`
	* An illustrative example can be found in the chapter "Unicast Route".

Error Messages	% Priority must be 0 - 255
	% MD5 Key ID must be 1 - 255
	% this IF is not existed in OSPF Interface list.
	% Metric must be 1 - 65535
	% Hello Interval must be 1 - 65535
	% Dead Interval must be 1 - 65535
	% Auth Key lengths up to 8 characters
	vlan id does not exist!!
	^Parse error
	^Incomplete command
Related Commands	route ospf show interface vlan

interface vlan ip directed-broadcast

To enable directed broadcast for LAN interface, use the **interface vlan** global configuration command and **ip directed-broadcast** sub-level configuration command. To disable directed broadcast, use the **no** form of this command.

Synopsis

(config)# **interface vlan** <vlan-id>
(config-vif)# **ip directed-broadcast** [**source-ip**]

(config-vif)# **no ip directed-broadcast**

Option Description	vlan-id	Ranges from 1 to 4094.
	directed-broadcast	Enables directed broadcast feature.
	source-ip	Specifies to overwrite source IP
Defaults	Directed broadcast is disabled by default.	
Command Modes	Global configuration, sub-level configuration	
Usage Guidelines	• This command only applies to LAN interface using the non-management VLAN. • Make sure the VLAN ID is created in advance before using it. • This feature supports directed broadcast for UDP packets only; ICMP is not included.	

Examples	Enable directed broadcast.
	`router# configure`
	`router(config)# interface vlan 10`
	`router(config-vif)# ip directed-broadcast`
	`router(config-vif)# exit`	

Error Messages	^Parse error	
	vlan id does not exist!!	
	^Incomplete command	
Related Commands	show ip directed-broadcast	

interface vlan mac-address

To configure virtual MAC address to LAN interface, use the **interface vlan** global configuration command and **mac-address** sub-level configuration command. To return virtual MAC address to default, use the **default** argument of this command.

Synopsis

(config)# **interface vlan** <vlan-id>

(config-vif)# **mac-address** {<mac-addr> |
default}

Option Description	vlan-id	Ranges from 1 to 4094.
	mac-address	The virtual MAC address.
	default	Return to default value 00:00:00:00:00:00
Defaults	00:00:00:00:00:00	
Command Modes	Global configuration, sub-level configuration	
Usage Guidelines	• This command only applies to LAN interface using the non-management VLAN. • Make sure the VLAN ID is created in advance before using it.	

Examples	Specify the virtual MAC (00:90:e8:12:34:57) to the interface using non-management VLAN.
	`router# configure`
	`router(config)# interface vlan 2`
	`router(config-vif)# mac-address 00:90:e8:12:34:57`
	`router(config-vif)# exit`	

Error Messages	vlan id does not exist!!	
	^Parse error	
	^Incomplete command	
Related Commands	N/A	

show interfaces vlan

To check the status of the VLAN interfaces, use the **show interfaces vlan** command.

Synopsis

show interfaces vlan [<vlan-id>]

Option Description	interfaces	Interface status and configuration
	vlan	Specifies LAN interface (using non-management VLAN)
	vlan-id	Specifies a specific VLAN ID
Defaults	N/A	
Command Modes	Privileged EXEC / User EXEC	
Usage Guidelines	Make sure the VLAN ID is created in advance before using it.	

Examples	`router# show interfaces vlan 2`
	
	`Interface Name: LAN2`
	`State: Enable`
	`IP Address: 192.168.2.254`
	`Subnet Mask: 255.255.255.0`
	`VLAN ID: 2`	

Error Messages	^Parse error	
	^Incomplete command	
Related Commands	interface vlan	

WAN

interface wan shutdown

To disable WAN interface connection mode, use the **interface wan** global configuration command and **shutdown** sub-level configuration command. To enable WAN interface connection mode, use the **no** form of this command.

Synopsis

(config)# **interface wan**
(config-if)# {**shutdown** |
exit}

(config-if)# **no shutdown**

Option Description	shutdown	Specifies "Connection Mode" to Disable
	exit	Commit new settings and exit sub-level configuration mode.
Defaults	N/A	
Command Modes	Global configuration, sub-level configuration	
Usage Guidelines	N/A	

Examples	Specify "Connection Mode" to Enable.
	`router# configure`
	`router(config)# interface wan`
	`router(config-if)# no shutdown`
	`router(config-if)# exit`
	`router(config)# exit`	

Error Messages	^Parse error	
	^Incomplete command	
Related Commands	show interface wan	

interface wan ip address

To configure static/dhcp/pppoe for WAN interface, use the **interface wan** global configuration command and **ip address** sub-level configuration command sets. To disable dhcp option66/67, use the **no** form of this command.

Synopsis

(config)# **interface wan**

(config-if)# **ip address** {**static** <wan-ip> <netmask> <gateway>|
dhcp [**option66-67**] |
pppoe <user-name> <password> <hostname>}

(config-if)# **no ip address dhcp option66-67**

Option Description	static	Specifies static IP type
	wan-ip	IP address
	netmask	Netmask of the static IP address
	gateway	Gateway IP address
	dhcp	Specifies dynamic IP type
	option66-67	Specifies DHCP option 66/67
	pppoe	Specifies PPPoE type
	user-name	The User Name for logging in to the PPPoE server. Maximum string length is 30.
	password	The login password for the PPPoE server. Maximum string length is 30.
	hostname	User-defined Host Name of this PPPoE server. Maximum string length is 30.
Defaults	N/A	
Command Modes	Global configuration, sub-level configuration	
Usage Guidelines	N/A	

Examples	Specify DHCP type and enable DHCP option 66/67.
	`router# configure`
	`router(config)# interface wan`
	`router(config-if)# ip address dhcp option66-67`
	`router(config-if)# exit`
	`router(config)# exit`	

Error Messages	% is over length. It must be 1 - 30.	
	% Interface is not dynamic IP mode	
	^Parse error	
	^Incomplete command	
Related Commands	show interface wan	

interface wan ip pptp

To configure PPTP dialup when using dynamic IP type for WAN interface, use the **interface wan** global configuration command and **ip pptp** sub-level configuration command sets. To disable PPTP, use the **no** form of this command.

Synopsis

(config)# **interface wan**
(config-if)# **ip pptp** {<pptp-ip> <user-name> <password> |
mppe}

(config-if)# **no ip pptp** [**mppe**]

Option Description	pptp-ip	The PPTP service IP address
	user-name	The Login username when dialing up to PPTP service. Maximum string length is 30.
	password	The password for dialing the PPTP service. Maximum string length is 30.
	mppe	Enables or disables the MPPE encryption
Defaults	N/A	
Command Modes	Global configuration, sub-level configuration	
Usage Guidelines	N/A	

Examples	Specify the PPTP server IP (192.168.1.100), user name (demo-usr) and password (demo-pwd).
	`router# configure`
	`router(config)# interface wan`
	`router(config-if)# ip pptp 192.168.1.100 demo-usr demo-pwd`
	`router(config-if)# exit`	

Error Messages	% is over length. It must be 1 - 30.	
	^Parse error	
	^Incomplete command	
Related Commands	show interface wan	

interface wan ip name-server

To configure DNS servers for WAN interface, use the **interface wan** global configuration command and **ip name-server** sub-level configuration command.

Synopsis

(config)# **interface wan**
(config-if)# **ip name-server** <dns1> [<dns2> [<dns3>]]

Option Description	dns1	1st The DNS IP address
	dns2	2nd The DNS IP address
	dns3	3rd The DNS IP address
Defaults	N/A	
Command Modes	Global configuration, sub-level configuration	
Usage Guidelines	The priority of a manually configured DNS will be higher than the DNS from the PPPoE or DHCP server.	

Examples	Specify the DNS server 1 IP (8.8.8.8) and DNS server 2 IP (9.9.9.9).
	`router# configure`
	`router(config)# interface wan`
	`router(config-if)# ip name-server 8.8.8.8 9.9.9.9`
	`router(config-if)# exit`	

Error Messages	^Parse error	
	^Incomplete command	
Related Commands	show interface wan	

interface wan ip ospf

To configure dynamic routing with OSPF interface settings and auth type for WAN, use the **interface wan** global configuration command and **ip ospf** sub-level configuration command sets. To return to the default settings, use the **no** form of this command.

Synopsis

(config)# **interface wan**
(config-if)# **ip ospf** {**cost** <metric> |
priority <pri-number> |
hello-interval <h-second> |
dead-interval <d-second> |
auth {**simple auth-key** <key-string>|
md5 <key-id> **auth-key** <md5-key-string>} |
area <area-id>}

(config-if)# **no ip ospf** [{**cost** |
priority |
hello-interval |
dead-interval |
auth}]

Option Description	cost	Specifies Metric/Cost of OSPF
	metric	Metric/Cost of OSPF. Ranges from 1 to 65535.
	priority	Specifies router's priority
	pri-number	Priority. Ranges from 0 to 255.
	hello-interval	Specifies Hello packets which are packets that an OSPF process sends to its OSPF neighbors to maintain connectivity with those neighbors.
	h-second	Interval of hello packets. Ranges from 1 to 65535 seconds.
	dead-interval	Specifies the dead-interval
	d-second	Interval of dead packets. Ranges from 1 to 65535 seconds.
	auth	Enables or disables auth function
	simple auth-key	Specifies simple auth type
	key-string	A key string for simple auth type. Maximum string length is 8.
	md5	Specifies MD5 auth type
	key-id	A key ID for MD5 hash calculation. Ranges from 1 to 255.
	auth-key	Specifies MD5 key for hash
	md5-key-string	A key string for MD5 auth type. Maximum string length is 8.
	area	Specifies the area ID
	area-id	An area ID
Defaults	• metric : 1 • h-interval : 10 • d-interval : 40 • pri-number : 1	
Command Modes	Global configuration, sub-level configuration	
Usage Guidelines	N/A	

Examples	• Specify Auth type to "none".
	`router# configure`
	`router(config)# interface wan`
	`router(config-if)# no ip ospf auth`
	`router(config-if)# exit`
	`router(config)# exit`
	
	• Delete OSPF WAN interface.
	`router# configure`
	`router(config)# interface wan`
	`router(config-if)# no ip ospf`
	`router(config-if)# exit`
	`router(config)# exit`	

	• Return hello interval to default.
	`router# configure`
	`router(config)# interface wan`
	`router(config-if)# no ip ospf hello-interval`
	`router(config-if)# exit`
	`router(config)# exit`
	* An illustrative example can be found in the chapter "Unicast Route".

Error Messages	% Priority must be 0 - 255
	% MD5 Key ID must be 1 - 255
	% Please bind WAN VLAN ID first.
	% Metric must be 1 - 65535
	% Hello Interval must be 1 - 65535
	% Dead Interval must be 1 - 65535
	% Auth Key lengths up to 8 characters
	^Parse error
	^Incomplete command
Related Commands	route ospf show interface wan

interface wan ip directed-broadcast

To enable directed broadcast for WAN interface, use the **interface wan** global configuration command and **ip directed-broadcast** sub-level configuration command. To disable directed broadcast, use the **no** form of this command.

Synopsis

(config)# **interface wan**
(config-if)# **ip directed-broadcast** [**source-ip**]

(config-if)# **no ip directed-broadcast**

Option Description	directed-broadcast	Enables directed broadcast feature.
	source-ip	Specifies to overwrite source IP
Defaults	Directed broadcast is disabled by default.	
Command Modes	Global configuration, sub-level configuration	
Usage Guidelines	This feature supports directed broadcast for UDP packets only; ICMP is not included.	

Examples	Enable directed broadcast.
	`router# configure`
	`router(config)# interface wan`
	`router(config-if)# ip directed-broadcast`
	`router(config-if)# exit`	

Error Messages	N/A	
	^Parse error	
	^Incomplete command	
Related Commands	show interface wan show ip directed-broadcast	

interface wan bind vlan

To bind VLAN to WAN interface, use the **interface wan** global configuration command and **bind vlan** sub-level configuration command. To remove VLAN from WAN interface, use the **no** form of this command.

Synopsis

(config)# **interface wan**
(config-if)# **bind vlan** <vlan-id>

(config-if)# **no bind vlan**

Option Description	bind vlan	Specifies to bind VLAN to WAN interface
	vlan-id	Ranges from 1 to 4094.
Defaults	N/A	
Command Modes	Global configuration, sub-level configuration	
Usage Guidelines	Make sure the VLAN ID is created in advance before using it.	

Examples	Specify VLAN ID (2) for WAN interface.
	`router# configure`
	`router(config)# interface wan`
	`router(config-if)# bind vlan 2`
	`router(config-if)# exit`	

Error Messages	vlan id does not exist!!	
	^Parse error	
	^Incomplete command	
Related Commands	show interface wan	

interface wan mac-address

To configure virtual MAC address to WAN interface, use the **interface wan** global configuration command and **mac-address** sub-level configuration command. To return virtual MAC address to default, use the **default** argument of this command.

Synopsis

(config)# **interface wan**
(config-if)# **mac-address** {<mac-addr> |
default}

Option Description	mac-address	The virtual MAC address.
	default	Return to default value 00:00:00:00:00:00
Defaults	00:00:00:00:00:00	
Command Modes	Global configuration, sub-level configuration	
Usage Guidelines	N/A	

Examples	Specify the virtual MAC (00:90:e8:12:34:58) to the WAN interface.
	`router# configure`
	`router(config)# interface wan`
	`router(config-if)# mac-address 00:90:e8:12:34:58`
	`router(config-if)# exit`	

Error Messages	^Parse error	
	^Incomplete command	
Related Commands	show interface wan	

show interfaces wan

To check the status of the default WAN interface, use the **show interfaces wan** command.

Synopsis

show interfaces wan

Option Description	interfaces	Interface status and configuration
	wan	Specifies default WAN interface
Defaults	N/A	
Command Modes	Privileged EXEC / User EXEC	
Usage Guidelines	N/A	

Examples	`router# show interfaces wan`
	`WAN`
	`Vlan ID : 3`
	`Connect Mode : Enable`
	`Connect Type : Static`
	`IP Address : 192.168.3.254`
	`Netmask : 255.255.255.0`
	`Gateway : 0.0.0.0`
	`PPTP Connection : Disable`
	`PPTP IP Address : 0.0.0.0`
	`PPTP User Name :`
	`PPTP Password :`
	`PPTP MPPE Encryption: Disable`
	`DNS Server : 0.0.0.0 0.0.0.0 0.0.0.0`	

Error Messages	^Parse error	
	^Incomplete command	
Related Commands	interface wan	

Maximum Transmission Unit

mtu

To specify or modify maximum transmission unit (MTU) on an interface, use the **mtu** global configuration command set.

Synopsis

(config)# **mtu** <if-name> <size>

Option Description	if-name	The name of LAN/WAN interface
	size	MTU size in bytes. Ranges from 68 to 1578.
Defaults	N/A	
Command Modes	Global configuration	
Usage Guidelines	N/A	

Examples	Specify MTU of interface (LAN10) to 1512.
	`router# configure`
	`router(config)# mtu LAN10 1512`	

Error Messages	% Invalid MTU size . (68~1578)	
	^Parse error	
	^Incomplete command	
Related Commands	show mtu	

show mtu

To check maximum transmission unit (MTU) settings on the router, use the **show mtu** command.

Synopsis

show mtu

Option Description	mtu	Specifies to display MTU information of LAN/WAN interfaces.
Defaults	N/A	
Command Modes	Privileged EXEC / User EXEC	
Usage Guidelines	N/A	

Examples	`router # show mtu`
	`MTU Adjustment`
	`Interface MTU`
	`--- ---`
	`WAN 1500`
	`LAN20 1500`
	`LAN10 1512`	

Error Messages	^Parse error	
	^Incomplete command	
Related Commands	mtu	

Bridge Group Interface

interface bridge

To configure a port-based bridge interface, use the **interface bridge** global configuration command and related sub-level configuration command sets. To exit sub-level configuration mode, use **exit** command.

Synopsis

Enable / Disable a port-based bridge interface

(config)# **interface bridge**
(config-brg)# **no shutdown**
(config-brg)# **shutdown**

Set IP address of port-based bridge interface

(config-brg)# **ip address** <brg-ip> <netmask>

Set name of the bridge interface

(config-brg)# **name** <brg-name>

Save and Exit port-based bridge interface configuration

(config-brg)# **exit**

Option Description	ip address	Specifies IP address of the bridge interface
	brg-ip	IP address
	netmask	Netmask of the static IP address
	name	Specifies the name of the bridge interface
	brg-name	The name of bridge interface
	exit	Commit new settings and exit sub-level configuration mode.
	shutdown	Disables the bridge interface.
Defaults	Disabled.	
Command Modes	Global configuration, sub-level configuration	
Usage Guidelines	• Bridge member ports can be configured via **interface ethernet** and its sub-level **bridge group** commands. • Maximum number of bridge interface is one which means either a port-based bridge or a zone-based bridge interface can be configured.	

Examples	• Specify the IP address and netmask of the port-based bridge interface.
	`router# configure`
	`router(config)# interface bridge`
	`router(config-brg)# ip address 192.168.57.254 255.255.255.0`
	`router(config-brg)# exit`
	• Specify the name of the port-based bridge interface.
	`router# configure`
	`router(config)# interface bridge`
	`router(config-brg)# name BRG_LAN`
	`router(config-brg)# exit`
	• Enable the port-based bridge interface.
	`router# configure`
	`router(config)# interface bridge`
	`router(config-brg)# no shutdown`
	`router(config-brg)# exit`	

Error Messages	% is over length. It must be 1 - 12.	
	^Parse error	
	^Incomplete command	
Related Commands	show interfaces bridge	

interface ethernet bridge

To select the Ethernet interface as a member port of the port-based bridge interface, use the **interface ethernet** global configuration command and related sub-level configuration command sets. To remove Ethernet interface from bridge member ports, use **no** form of this command.

Synopsis

(config)# **interface ethernet** <mod-port>
(config-if)# **bridge group**

(config-if)# **no bridge group**

Option Description	mod-port	Port ID (consists of module/port-number) or list. E.g. 1/1,2,3,2/1-3,5,...
	bridge group	Adds/removes the Ethernet interface to/from bridge member ports
Defaults	Unselected.	
Command Modes	Global configuration, sub-level configuration	
Usage Guidelines	• If bridge member is empty, remember to disable the bridge interface by using **interface bridge** and **shutdown** command. • Once all member ports have been specified, use **interface bridge** and **no shutdown** command to let settings take effect. • At least two member ports are selected before using this bridge interface. • Maximum number of bridge member of TN-4908 series is 8. • Maximum number of bridge member of TN-4916 series is 16.	

Examples	Specify PORT5, PORT6, PORT7 as port-based bridge members.
	`router# configure`
	`router(config)# interface ethernet 1/5`
	`router(config-if)# bridge group`
	`router(config-if)# exit`
	`router(config)# interface ethernet 1/6`
	`router(config-if)# bridge group`
	`router(config-if)# exit`
	`router(config)# interface ethernet 1/7`
	`router(config-if)# bridge group`
	`router(config-if)# exit`
	`router(config)# interface bridge`
	`router(config-brg)# no shutdown`
	`router(config-brg)# exit`	

Error Messages	% Illegal parameter.	
	^Parse error	
	^Incomplete command	
Related Commands	show interfaces bridge	

interface zone-base-bridge

To configure a zone-based bridge interface, use the **interface zone-base-bridge** global configuration command and related sub-level configuration command sets. To exit sub-level configuration mode, use **exit** command.

Synopsis

Enable / Disable a zone-based bridge interface

(config)# **interface zone-base-bridge**
(config-brg)# **no shutdown**
(config-brg)# **shutdown**

Set IP address of zone -based bridge interface

(config-brg)# **ip address** <brg-ip> <netmask>

Set name of the bridge interface

(config-brg)# **name** <brg-name>

Save and Exit zone -based bridge interface configuration

(config-brg)# **exit**

Option Description	ip address	Specifies IP address of the bridge interface
	brg-ip	IP address
	netmask	Netmask of the static IP address
	name	Specifies the name of the bridge interface
	brg-name	The name of bridge interface
	exit	Commit new settings and exit sub-level configuration mode.
	shutdown	Disables the bridge interface.
Defaults	Disabled	
Command Modes	Global configuration, sub-level configuration	
Usage Guidelines	• Bridge member ports can be configured via **interface vlan zone-base-bridge** commands. • Maximum number of bridge interface is one which means either a port-based bridge or a zone-based bridge interface can be configured.	

Examples	• Specify the IP address and netmask of the zone-based bridge interface.
	`router# configure`
	`router(config)# interface zone-base-bridge`
	`router(config-brg)# ip address 192.168.58.254 255.255.255.0`
	`router(config-brg)# exit`
	• Specify the name of the zone-based bridge interface.
	`router# configure`
	`router(config)# interface zone-base-bridge`
	`router(config-brg)# name BRG_LAN`
	`router(config-brg)# exit`
	• Enable the zone-based bridge interface.
	`router# configure`
	`router(config)# interface zone-base-bridge`
	`router(config-brg)# no shutdown`
	`router(config-brg)# exit`	

Error Messages	% is over length. It must be 1 - 12.	
	^Parse error	
	^Incomplete command	
Related Commands	show interfaces zone-base-bridge	

interface vlan zone-base-bridge

To configure bridge members of the zone-based interface, use the **interface vlan** global configuration command and **name** sub-level configuration command.

Synopsis

(config)# **interface vlan** <vlan-id> **zone-base-bridge** <zone-index> <zone-name>

Option Description	vlan-id	VLAN ID to be selected into a zone-based bridge. Ranges from 1 to 4094.
	zone-base-bridge	Specifies the a zone-based bridge
	zone-index	Ranges from 1 to 4.
	zone-name	Name of specified zone-based bridge
Defaults	N/A	
Command Modes	Global configuration	
Usage Guidelines	• This command only applies to LAN interface using the non-management VLAN. • Once all member ports have been specified, use **interface zone-base-bridge** and **no shutdown** command to let settings take effect. • At least two member ports are selected before using this bridge interface. • Only one VLAN segment (VID) is allowed in each zone. • Eligible VIDs should be configured before selecting the bridge member. • Maximum number of bridge member of TN-4900 series is 4.	

Examples	Specify VLAN(5), VLAN(8) as zone-based bridge members.
	`router# configure`
	`router(config)# interface vlan 5 zone-base-bridge 1 z1`
	`router(config)# interface vlan 8 zone-base-bridge 2 z2`
	`router(config)# exit`	

Error Messages	% is over length. It must be 1 - 12.	
	vlan id does not exist!!	
	^Parse error	
	^Incomplete command	
Related Commands	N/A	

show interfaces bridge

To check the status of the port-based bridge interface, use the **show interfaces bridge** command.

Synopsis

show interfaces bridge

Option Description	interfaces	Interface status and configuration
	bridge	Specifies port-based bridge
Defaults	N/A	
Command Modes	Privileged EXEC / User EXEC	
Usage Guidelines	N/A	

Examples	`router# show interfaces bridge`
	`Interface Name: BRG_LAN`
	`State: Enable`
	`IP Address: 192.168.57.254`
	`Subnet Mask: 255.255.255.0`	

Error Messages	^Parse error	
	^Incomplete command	
Related Commands	interface bridge interface zone-base-bridge interface vlan zone-base-bridge	

show interfaces zone-base-bridge

To check the status of the zone-based bridge interface, use the **show interfaces zone-base-bridge** command.

Synopsis

show interfaces zone-base-bridge

Option Description	interfaces	Interface status and configuration
	zone-base-bridge	Specifies zone-based bridge
Defaults	N/A	
Command Modes	Privileged EXEC / User EXEC	
Usage Guidelines	N/A	

Examples	`router # show interfaces zone-base-bridge`
	`Interface Name: BRG_LAN`
	`State: Enable`
	`IP Address: 191.168.58.254`
	`Subnet Mask: 255.255.255.0`	

Error Messages	^Parse error	
	^Incomplete command	
Related Commands	interface bridge interface zone-base-bridge interface vlan zone-base-bridge	

Routing

Unicast Route

ip route static

To create a static route entry, use the **ip route static** global configuration command. To delete the static route entry, use the **no** form of this command.

Synopsis

(config)# **ip route static** <entry-name> {<ip> <netmask> <nexthop-ip> <metric> |
enable |
disable}

(config)# **no ip route static** <entry-name>

Option Description	entry-name	The entry name in this static route table
	ip	Destination IP address
	netmask	Subnet mask for this IP address
	nexthop-ip	The next router along the path to the destination
	metric	A "cost" for accessing the neighboring network
	enable	Enables this static route entry
	disable	Disables this static route entry
Defaults	N/A	
Command Modes	Global configuration	
Usage Guidelines	• Maximum number of static multicast route entries is 512 • Network interfaces related to this routing feature must be created in advance.	
Examples	Static route function: Prerequisites: • TN router A: - LAN1: 192.168.3.254/24, VLAN ID=3 - LAN2: 192.168.4.254/24, VLAN ID=4 • TN router B: - LAN1: 192.168.5.250/24, VLAN ID=5 - LAN2: 192.168.4.250/24, VLAN ID=4 • PC (1): - IP: 192.168.3.100/24 - Gateway: 192.168.3.254 • PC (2): - IP: 192.168.5.100/24 - Gateway: 192.168.5.250	

	Network topology:
	 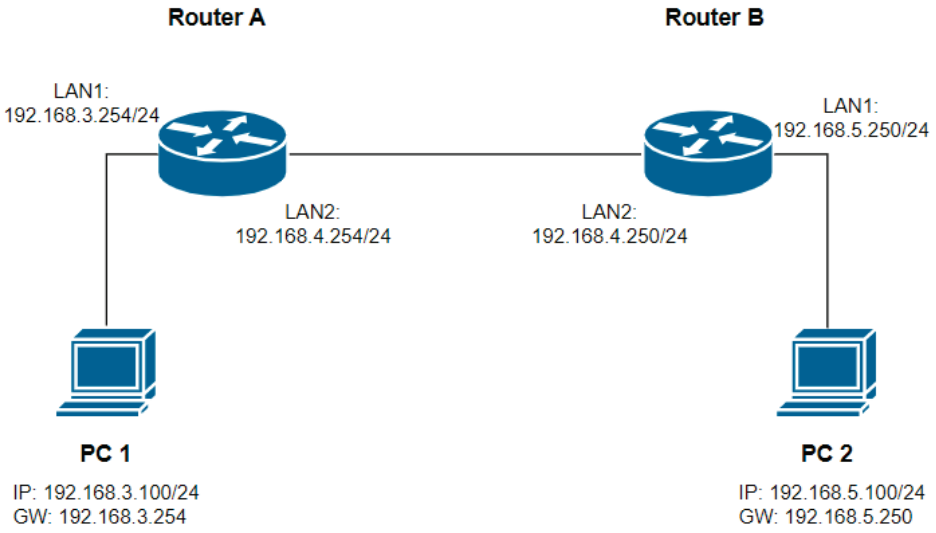
	
	Scenario:
	a) When the network topology is fixed, no router is expected to be removed or added, configuring static route on each router is considered.
	b) PC1 can communicate with PC2 via its gateway: 192.168.3.254.
	c) PC2 can communicate with PC1 via its gateway: 192.168.5.250.
	
	Commands:
	[On Router A]
	`router# configure`
	`router(config)# ip route static routerB 192.168.5.0 255.255.255.0 192.168.4.250 10`
	`router(config)# exit`
	
	[On Router B]
	`router# configure`
	`router(config)# ip route static routerA 192.168.3.0 255.255.255.0 192.168.4.254 10`
	`router(config)# exit`

Error Messages	% is existed in Static Route list
	^Parse error
	^Incomplete command
Related Commands	show ip route static

router rip

To enable RIP function on the router, use the **router rip** global configuration command and related sub-level configuration command sets. To disable RIP function, use the **no** form of this command.

Synopsis

Enable / Disable RIP

(config)# **router rip**
(config)# **no router rip**

Set interface name to enable RIP

(config-rip)# **network** <if-name>

Set version of RIP

(config-rip)# **version** {**1** | **2**}

Enable / Disable Redistribute entries

(config-rip)# **redistribute** {**connected** |
static |
ospf}

(config-rip)# **no redistribute** {**connected** |
static |
ospf}

Save and Exit RIP configuration.

(config-rip)# **exit**

Option Description	rip	Enables Routing Information Protocol (RIP) function.
	network	Specifies the interface to enable RIP function.
	if-name	Interface name
	redistribute	Redistribute entries learned from specified interfaces
	connected	Entries learned from directly connected interfaces will be re-distributed.
	static	Entries set in a static route will be re-distributed
	ospf	Entries learned from the OSPF will be re-distributed
	version	Specifies which version of RIP will be followed
	1	RIPv1
	2	RIPv2
	exit	Commit new settings and exit sub-level configuration mode.
Defaults	Disabled	
Command Modes	Global configuration, sub-level configuration	
Usage Guidelines	Network interfaces related to this routing feature must be created in advance.	
Examples	RIP function: Prerequisites: • TN router A: - LAN1: 192.168.3.254/24, VLAN ID=3 - LAN2: 192.168.4.254/24, VLAN ID=4 • TN router B: - LAN1: 192.168.5.250/24, VLAN ID=5 - LAN2: 192.168.4.250/24, VLAN ID=4 • PC (1): - IP: 192.168.3.100/24 - Gateway: 192.168.3.254 • PC (2): - IP: 192.168.5.100/24 - Gateway: 192.168.5.250	

	Network topology:
	 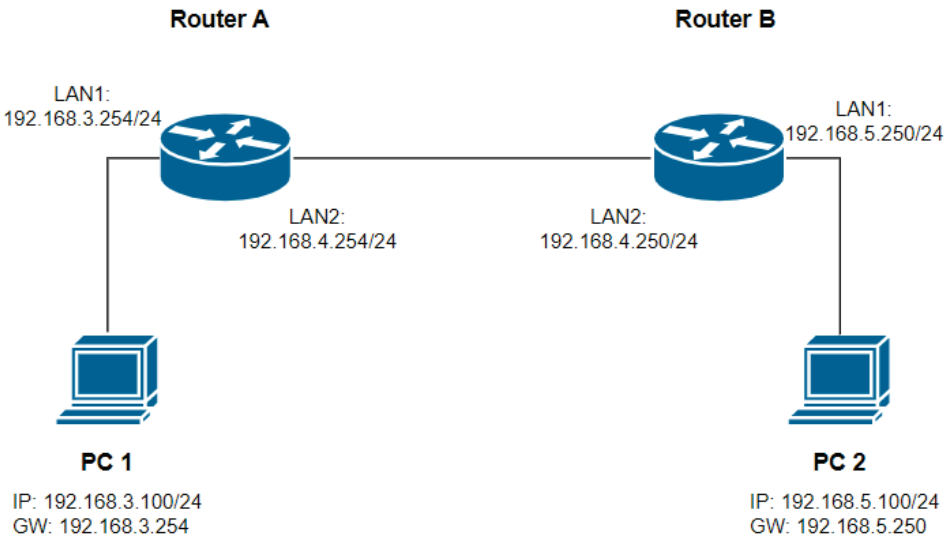
	
	Scenario:
	a) When the maximum hop count is less than 15 in a network topology and some routers are allowed to be removed or added on some occasions, static route (RIP) could be the option for dynamic routing.
	b) This example takes advantage of RIP to generate a routing table on each router automatically.
	c) PC1 can communicate with PC2 via its gateway: 192.168.3.254.
	d) PC2 can communicate with PC1 via its gateway: 192.168.5.250.
	
	Commands:
	[On Router A]
	`router# configure`
	`router(config)# router rip`
	`router(config-rip)# version 2`
	`router(config-rip)# network LAN1`
	`router(config-rip)# network LAN2`
	`router(config-rip)# exit`
	
	[On Router B]
	`router# configure`
	`router(config)# router rip`
	`router(config-rip)# version 2`
	`router(config-rip)# network LAN1`
	`router(config-rip)# network LAN2`
	`router(config-rip)# exit`

Error Messages	% Invalid format
	% Invalid Network Interface Name.
	% Invalid Version. It must be 1 or 2.
	^Parse error
Related Commands	show ip rip show ip route

router ospf

To configure dynamic routing with OSPF virtual-link or area aggregation settings, use the **router ospf** global configuration command and related sub-level configuration command sets. To remove the settings, use the **no** form of this command.

Synopsis

Enable / Disable OSPF

(config)# **router ospf**
(config)# **no router ospf**

Change Router ID and enter sub-level configuration mode

(config)# **router ospf** <router-id>

Enable /Disable redistribution of OSPF

(config-ospf)# **redistribute** {**connected** |
static |
rip}

(config-ospf)# **no redistribute** {**connected** |
static |
rip}

Add / Remove Area ID with Normal Area Type

(config-ospf)# **area** <area-id>
(config-ospf)# **no area** <area-id>

Set Area ID with Stub/NSSA Area Type

(config-ospf)# **area** <area-id> [{**stub metric** <number> |
nssa metric <number>}]

Add / Remove Virtual-link or Area aggregation

(config-ospf)# **area** <area-id> [{**virtual-link** <router-id> |
range <dst-network> <netmask>}]

(config-ospf)# **no area** <area-id> [{**virtual-link** <router-id> |
range <dst-network> <netmask>}]

Save and Exit OSPF configuration

(config-ospf)# **exit**

Option Description		
	ospf	Specifies/enables Open Shortest Path First (OSPF) function
	router-id	Router's IP address
	exit	Commit new settings and exit sub-level configuration mode.
	redistribute	Specifies what entries will be re-distributed
	connected	Entries learned from the directly connected interfaces will be re-distributed.
	static	Entries set in a static route will be re-distributed.
	rip	Entries learned from the RIP will be re-distributed.
	area	Specifies the area ID
	area-id	An area ID
	range	Specifies OSPF area aggregation
	dst-network	Destination network
	netmask	Netmask of the destination network.
	stub metric	Specifies metric of stub area.
	number	Metric/Cost of OSPF. Ranges from 1 to 65535
	nssa metric	Specifies metric of nssa area.
	virtual-link	Specifies neighbor router ID
	n-router-id	A neighbor router ID

Defaults	N/A
Command Modes	Global configuration, sub-level configuration
Usage Guidelines	Network interfaces related to this routing feature must be created in advance.

Examples	OSPF function:
	
	Prerequisites:
	• TN router A:
	- LAN1: 192.168.3.251/24, VLAN ID=3
	- LAN2: 192.168.4.251/24, VLAN ID=4
	• TN router B:
	- LAN2: 192.168.4.252/24, VLAN ID=4
	- LAN3: 192.168.5.252/24, VLAN ID=5
	• TN router C:
	- LAN3: 192.168.5.250/24, VLAN ID=5
	- LAN4: 192.168.6.250/24, VLAN ID=6
	• PC (1):
	- IP: 192.168.3.100/24
	- Gateway: 192.168.3.251
	• PC (2):
	- IP: 192.168.6.100/24
	- Gateway: 192.168.6.250
	
	Network topology:
	 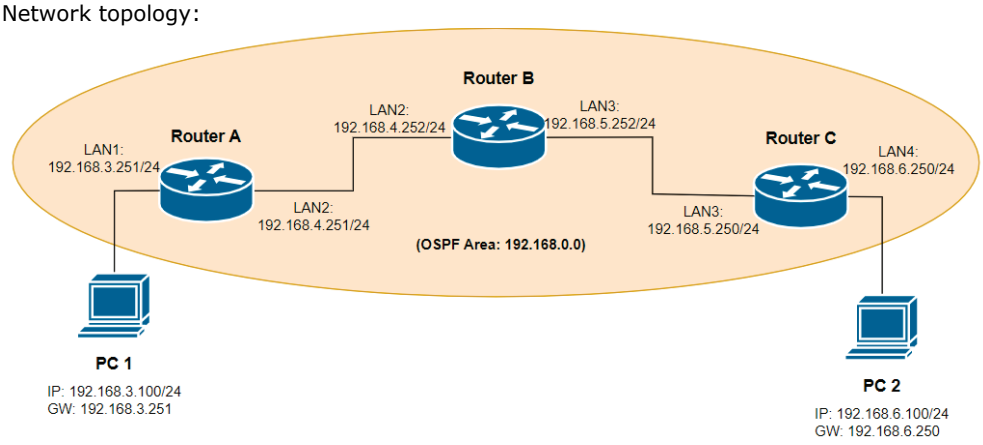
	
	Scenario:
	a) When the maximum hop count is greater than 15 in a network topology and some routers are allowed to be removed or added on some occasions, OSPF could be the option for dynamic routing.
	b) This example takes advantage of OSPF to generate a routing table on each router automatically.
	c) PC1 can communicate with PC2 via its gateway: 192.168.3.251.
	d) PC2 can communicate with PC1 via its gateway: 192.168.6.250.
	
	Commands:
	[On Router A]
	`router# configure`
	`router(config)# router ospf 192.168.4.251`
	`router(config-ospf)# redistribute connected`
	`router(config-ospf)# area 192.168.0.0`
	`router(config-ospf)# exit`
	`router(config)# interface vlan 4`
	`router(config-vif)# ip ospf area 192.168.0.0`
	`router(config-vif)# exit`

	[On Router B]
	`router# configure`
	`router(config)# router ospf 192.168.5.252`
	`router(config-ospf)# area 192.168.0.0`
	`router(config-ospf)# exit`
	`router(config)# interface vlan 4`
	`router(config-vif)# ip ospf area 192.168.0.0`
	`router(config-vif)# exit`
	`router(config)# interface vlan 5`
	`router(config-vif)# ip ospf area 192.168.0.0`
	`router(config-vif)# exit`
	
	[On Router C]
	`router# configure`
	`router(config)# router ospf 192.168.6.250`
	`router(config-ospf)# redistribute connected`
	`router(config-ospf)# area 192.168.0.0`
	`router(config-ospf)# exit`
	`router(config)# interface vlan 5`
	`router(config-vif)# ip ospf area 192.168.0.0`
	`router(config-vif)# exit`

Error Messages	% Metric must be 1 - 65535
	% is not existed in OSPF Area list.
	% Entry is not found
	% is not existed in OSPF Virtual Link list.
	^Parse error
	^Incomplete command
Related Commands	show ip ospf show ip route ip ospf

show ip route

To check the routing table information on the router, use the **show ip route** command.

Synopsis

show ip route [{**static** | **kernel**}]

Option Description	ip route	Specifies to display the routing table information
	static	Specifies to display the static routing entries
	kernel	Specifies to display the kernel routing table
Defaults	N/A	
Command Modes	Privileged EXEC / User EXEC	
Usage Guidelines	N/A	
Examples	router # show ip route Idx Type Destination Next Hop Interface Metric --- --------- ---------- ---------- --------- ------ 1 ospf 192.168.3.0/24 192.168.4.251 LAN2 20 2 connected 192.168.4.0/24 192.168.4.252 LAN2 1 3 connected 192.168.5.0/24 192.168.5.252 LAN3 1 4 ospf 192.168.6.0/24 192.168.5.250 LAN3 20 5 connected 192.168.127.0/24 192.168.127.252 LAN 1 router# show ip route static State Name Dst Address Netmask Next Hop Metric ------- ------- ---------- ---------- ---------- ------ Enable sr1 0.0.0.0 0.0.0.0 19.1.1.1 9 Enable sr2 22.22.0.0 255.255.0.0 22.22.0.254 10 router# show ip route kernel 192.168.3.0/24 via 192.168.4.251 dev LAN2 proto zebra metric 20 192.168.4.0/24 dev LAN2 proto kernel scope link src 192.168.4.252 192.168.5.0/24 dev LAN3 proto kernel scope link src 192.168.5.252 192.168.6.0/24 via 192.168.5.250 dev LAN3 proto zebra metric 20 192.168.127.0/24 dev LAN proto kernel scope link src 192.168.127.252	
Error Messages	^Parse error	
	^Incomplete command	
Related Commands	ip route	

show ip rip

To check the RIP settings on the router, use the **show ip rip** command.

Synopsis

show ip rip

Option Description	ip rip	Specifies to display RIP information
Defaults	N/A	
Command Modes	Privileged EXEC / User EXEC	
Usage Guidelines	N/A	
Examples	router# show ip rip RIP Protocol : Disable RIP Version : v2 Distribution Connetced : Disable Statis : Disable OSPF : Disable RIP Enable Table Interface Name IP VID Enable ---------- ---------- ---------- ---------- WAN 0.0.0.0 10 Disable LAN20 192.168.127.254 1 Disable LAN6 192.168.6.254 6 Disable	
Error Messages	^Parse error	
	^Incomplete command	
Related Commands	router rip	

show ip ospf

To check the OSPF settings on the router, use the **show ip ospf** command.

Synopsis

show ip ospf [{**database** |
instance |
neighbor}]

Option Description	ip ospf	Specifies to display OSPF setting information
	database	Specifies to display OSPF database
	instance	Specifies to display OSPF routing interface
	neighbor	Specifies to display OSPF neighbor information
Defaults	N/A	
Command Modes	Privileged EXEC / User EXEC	
Usage Guidelines	N/A	
Examples	router # show ip ospf OSPF Golbal Configuration ---------- OSPF Enabled Router ID 192.168.1.1 Current Router ID 192.168.1.1 Redistribute OSPF Area Configuration Idx Area ID Area Type Metric ---------- 1 192.168.1.1 Normal - 2 192.168.1.2 Stub 999 3 192.168.3.254 Normal - OSPF Virtual Link Configuration Idx Transit Area ID Neighbor Router ID ---------- 1 192.168.1.1 192.168.1.11 OSPF Aggregation Configuration Idx Area ID Network Address Network Mask ---------- 1 192.168.1.1 192.168.3.0 255.255.255.0 router# show ip ospf database Idx AreaID Link State ID Adv. Router Route LS Type ---------- 1 192.168.1.2 [Stub] 192.168.1.1 192.168.1.1 Router	
Error Messages	^Parse error	
	^Incomplete command	
Related Commands	router ospf	

Multicast Route

ip multicast-routing static

To enable static multicast route service, use the **ip multicast-routing static** global configuration command. To disable static multicast route service, use the **no** form of this command.

Synopsis

(config)# **ip multicast-routing static**

(config)# **no ip multicast-routing**

Option Description	static	Enables static multicast route
Defaults	Disabled.	
Command Modes	Global configuration	
Usage Guidelines	• In order to let all static multicast route entries take effect, Static Multicast Route mode needs to be enabled. • Network interfaces related to this routing feature must be created in advance.	
Examples	* An illustrative example can be found in the command "**ip mroute group**".	
Error Messages	^Parse error	
	^Incomplete command	
Related Commands	ip mroute group show ip mroute	

ip mroute group

To create a static multicast route entry, use the **ip mroute group** global configuration command. To delete the static multicast route entry, use the **no** form of this command.

Synopsis

(config)# **ip mroute group** <grp-addr> **src** <src-addr> {**in** <in-if> **out** <out-ifs> |
enable |
disable}

(config)# **no ip mrout group** <grp-addr> <src-addr>

Option Description	grp-addr	The IP address of the multicast group address
	src	Specifies the source address
	src-addr	The IP address of the multicast source address or **any** for any IP address.
	in	Specifies inbound interface
	in-if	The inbound interface name of the multicast stream
	out	Specifies outbound interface
	out-ifs	The outbound interface names of the multicast stream. Comma separated for more than one outbound interface.
	enable	Enables this static multicast route entry
	disable	Disables this static multicast route entry
Defaults	N/A	
Command Modes	Global configuration	
Usage Guidelines	• In order to let all static multicast route entries take effect, Static Multicast Route mode needs to be enabled. • Network interfaces related to this routing feature must be created in advance.	
Examples	Static multicast route function: Prerequisites: • TN router A: - LAN1: 192.168.3.254/24, VLAN ID=3 - LAN2: 192.168.4.254/24, VLAN ID=4 • TN router B: - LAN1: 192.168.5.250/24, VLAN ID=5 - LAN2: 192.168.4.250/24, VLAN ID=4 • PC (1): - IP: 192.168.3.100/24 - Gateway: 192.168.3.254 • PC (2): - IP: 192.168.5.100/24 - Gateway: 192.168.5.250 Network topology: 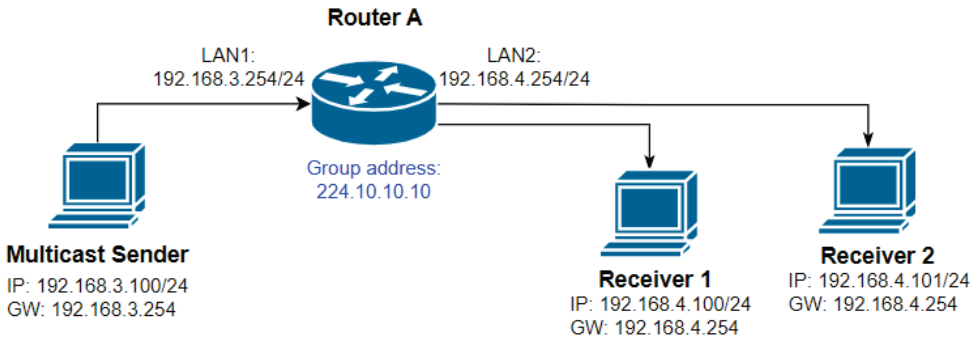 Scenario: a) When the maximum hop count is less than 15 in a network topology and some routers are allowed to be removed or added on some occasions, static route (RIP) could be the option for dynamic routing.	

	b) This example takes advantage of RIP to generate a routing table on each router automatically.
	c) PC1 can communicate with PC2 via its gateway: 192.168.3.254.
	d) PC2 can communicate with PC1 via its gateway: 192.168.5.250.
	
	Commands:
	[On Router A]
	`router# configure`
	`router(config)# router rip`
	`router(config-rip)# version 2`
	`router(config-rip)# network LAN1`
	`router(config-rip)# network LAN2`
	`router(config-rip)# exit`

Error Messages	% is not existed
	^Parse error
	^Incomplete command
Related Commands	N/A

show ip mroute

To check the Multicast forwarding table on the router, use the **show ip mroute** command.

Synopsis

show ip mroute {**kernel** | **static**}

Option Description	kernel	Specifies to display multicast forwarding table
	static	Specifies to display static multicast route configuration settings
Defaults	N/A	
Command Modes	Privileged EXEC / User EXEC	
Usage Guidelines	N/A	

Examples	`router# show ip mroute static`
	`State Group Source Inbound Outbound`
	`-------- --------------- --------------- -------- --------------------`
	`router# show ip mroute static`
	`State Group Source Inbound Outbound`
	`-------- --------------- --------------- -------- --------------------`
	`Enable 224.10.10.10 192.168.3.100 LAN1 LAN2,`
	
	`router# show ip mroute kernel`
	`Idx Group Source Inbound Packets Bytes Outbound`
	`--- --------------- ------------- -------- -------- ------ --------`
	`1 224.10.10.10 192.168.3.100 LAN1 0 0 LAN2`
	`2 239.255.255.250 192.168.127.1 LAN 744 209684`	

Error Messages	^Parse error	
	^Incomplete command	
Related Commands	ip multicast-routing static ip mroute group	

Broadcast Forward

ip broadcast-forward

To specify or modify UDP broadcast forwarding settings, use the **ip broadcast-forward** global configuration command sets. To remove the setting, use **no** form of this command.

Synopsis

Enable / Disable UDP broadcast forwarding

(config)# **ip broadcast-forward**
(config)# **no ip broadcast-forward**

Create / Delete UDP broadcast forwarding settings

(config)# **ip broadcast-forward in** <in-if> **out** <out-if> **udp** <port-list>
(config)# **no ip broadcast-forward in** <in-if> **out** <out-if> **udp** <port-list>

Option Description	broadcast-forward	Specifies to enable broadcast forwarding feature
	in	Specifies inbound interface
	in-if	The inbound interface name of the broadcast stream
	out	Specifies outbound interface
	out-if	The outbound interface names of the broadcast stream.
	udp	Specifies UDP destination ports
	port-list	Port List, comma separated for more than one port. e.g. 80,90
Defaults	Disabled	
Command Modes	Global configuration	
Usage Guidelines	• Inbound and outbound network interfaces must be configured in advance. • Multiple UDP ports can be configured in a comma separated port list.	
Examples	UDP broadcast forwarding function: Prerequisites: • TN router A: - LAN1: 192.168.3.254/24, VLAN ID=3 - LAN2: 192.168.4.254/24, VLAN ID=4 • UDP sender: - IP: 192.168.3.100/24 - Gateway: 192.168.3.254 • UDP receiver: - IP: 192.168.4.100/24 - Gateway: 192.168.4.254 Network topology: 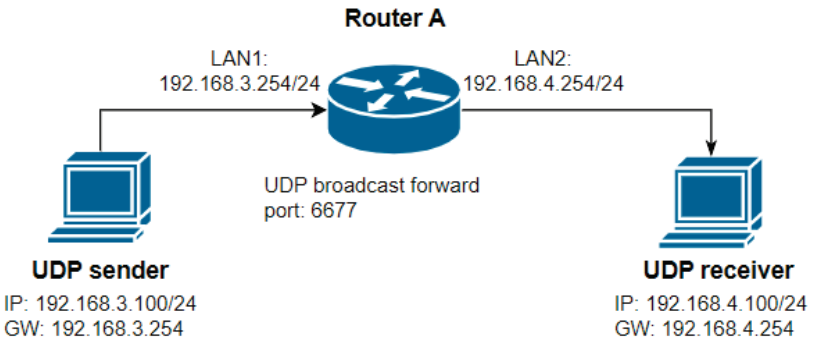 Scenario: a) The UDP sender broadcasts packets to the destination port 6677. b) The UDP receiver in a different subnet can receive the broadcast packets.	

	Commands:
	`router# configure`
	`router(config)# ip broadcast-forward in LAN1 out LAN2 udp  6677`
	`router(config)# ip broadcast-forward`

Error Messages	% Invalid Inbound Interface Name.
	% Invalid Outbound Interface Name.
	% This rule is not existed in Broadcast Forwarding Rule list.
	^Parse error
	^Incomplete command
Related Commands	show ip broadcast-forward

show ip broadcast-forward

To check the broadcast forward settings on the router, use the **show ip broadcast-forward** command.

Synopsis

show ip broadcast-forward

Option Description	broadcast-forward	Specifies to display broadcast forwarding settings
Defaults	N/A	
Command Modes	Privileged EXEC / User EXEC	
Usage Guidelines	N/A	

Examples	`router# show ip broadcast-forward`
	`Global Setting      : Enable`
	
	`In. Interface   Out. Interface  UDP Port`
	`--------------- --------------- ----------------------------------`
	`LAN1            LAN2            6677,`	

Error Messages	^Parse error	
	^Incomplete command	
Related Commands	ip broadcast-forward	

VRRP

router vrrp

To enable VRRP function on the router, use the **router vrrp** global configuration command. To disable VRRP function, use the **no** form of this command.

Synopsis

(config)# **router vrrp**

(config)# **no router vrrp**

Option Description	vrrp	Enables / disables Virtual Router Redundancy Protocol (VRRP) function.
Defaults	Disabled	
Command Modes	Global configuration	
Usage Guidelines	N/A	
Examples	* An illustrative example can be found in the command "**vrrp**".	
Error Messages	^Parse error	
	^Incomplete command	
Related Commands	vrrp vrrp version show vrrp	

vrrp version

To specify VRRP version on the router, use the **vrrp version** global configuration command. To return to default setting, use the no form of this command.

Synopsis

(config)# **vrrp version** {**2** | **3**}

(config)# **no vrrp version**

Option Description	vrrp	Enables Virtual Router Redundancy Protocol (VRRP) function.
	version	Specifies VRRP version
	2	Version 2
	3	Version 3
Defaults	Version 3	
Command Modes	Global configuration	
Usage Guidelines	N/A	
Examples	* An illustrative example can be found in the command "**vrrp**".	
Error Messages	^Parse error	
	^Incomplete command	
Related Commands	vrrp router vrrp show vrrp	

vrrp

To specify or modify the VRRP functions, use the **vrrp** global configuration command. To return to the default, use the **no** form of this command.

Synopsis

Create / Remove VRRP entry

(config)# **vrrp** <vrrp-index>
(config)# **no vrrp** <vrrp-index>

Set VRRP interface entry configuration

(config-vrrp)# {**vrrp** |
accept |
vrid <vid> |
virtual-ip <v-ip> |
priority <prio> |
preempt [**delay** <preemp-delay>] |
interface <ifs> |
adver-interval {**v2** | **v3**} <adv-interval>}

Set VRRP tracking configuration

(config-vrrp)# {**track-interface** <track-ifs> |
tracking ping <ping-ip> **interval** <ping-interval> **timeout** <timeout-sec>
success <success-count> **failure** <failure-count>}

Reset / Disable VRRP configuration

(config-vrrp)# **no** {**vrrp** |
priority |
preempt |
accept |
adver-interval |
track-interface |
tracking ping}

Save and Exit VRRP configuration

(config-vrrp)# **exit**

Option Description		
	vrrp-index	VRRP interface entry index
	exit	Commit new settings and exit sub-level configuration mode.
	vrrp	Enables VRRP entry
	accept	Enables VRRP accept mode function
	vrid	Specifies VRRP virtual router ID
	vid	VRRP virtual router ID
	virtual-ip	Specifies VRRP router's virtual IP
	v-ip	Virtual IP address
	priority	Specifies router's priority in a VRRP group
	prio	Ranges from 1 to 254.
	preempt	Enables preemption feature.
	delay	Specifies a preempt delay time
	preempt-delay	Ranges from 10 to 300 seconds
	interface	Specifies where you want to enable VRRP, LAN or WAN interface.
	ifs	Interface name
	adver-interval	Specifies advertisement interval
	v2	Specifies advertisement interval for VRRP version 2
	v3	Specifies advertisement interval for VRRP version 3
	adv-interval	V2: ranges from 1 to 30 seconds V3: ranges from 10 to 30000 milliseconds
	track-interface	Specifies VRRP tracking feature
	track-ifs	Interface name for VRRP tracking

	tracking ping	Specifies object ping tracking feature
	ping-ip	IP address
	interval	Specifies a time interval to ping destination to verify connection
	ping-interval	Ranges from 1 to 100 seconds
	timeout	Specifies a timeout value for the ping response
	timeout-sec	Ranges from 1 to 100 seconds
	success	Specifies how many times the ping responds in order to know the connection is working
	success-count	Ranges from 1 to 100
	failure	Specifies how many times the ping responds in order to know the connection is not working
	failure-count	Ranges from 1 to 100
Defaults	Disabled.	
Command Modes	Global configuration, sub-level configuration	
Usage Guidelines	• In order to maintain the network availability between two different networks, enabling ping tracking is highly recommended. An illustrative example can be found below. • Maximum number of VRRP interfaces is 16. • Network interfaces related to this routing feature must be created in advance.	
Examples	VRRP with ping tracking: Prerequisites: • TN router A: - LAN10: 10.10.10.100/24, VLAN ID=10 - LAN20: 192.168.126.100/24, VLAN ID=20 • TN router B: - LAN10: 10.10.10.200/24, VLAN ID=10 - LAN20: 192.168.126.200/24, VLAN ID=20 • PC 1: - IP: 10.10.10.150/24 - Gateway: 10.10.10.254 • PC 2: - IP: 192.168.126.150/24 - Gateway: 192.168.126.254 Network topology: 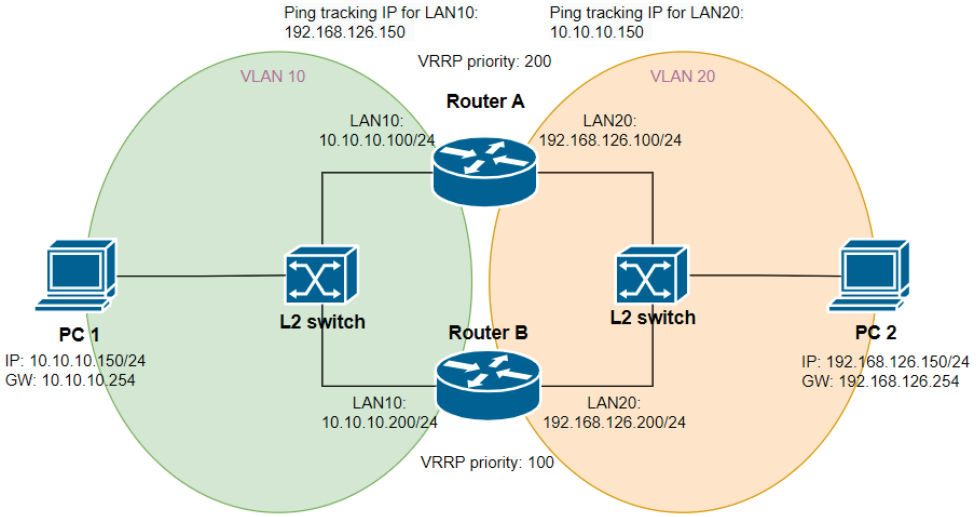 Scenario: a) Router A enables VRRP v3 and acts as the VRRP master with a higher priority (200). b) Router B enables VRRP v3 and acts as the VRRP backup with a lower priority (100). c) Virtual IP for VLAN10 is 10.10.10.254; virtual IP for VLAN 20 is 192.168.126.254 d) In order to perceive the connection status between PC 1 and Router A from LAN20, ping tracking IP 10.10.10.150 shall be configured for LAN20.	

e) In order to perceive the connection status between PC 2 and Router A from LAN10, ping tracking IP 192.168.126.150 shall be configured for LAN10.
f) Normally, PC 1 can send / receive packets to / from PC 2 via Router A.
g) As long as Router A cannot reach tracking IPs either 10.10.10.150 or 192.168.126.150 in this example, Router B becomes primary and PC 1 and PC 2 can communicate with each other via Router B.

Commands:
[On Router A]

```
router# configure
router(config)# router vrrp
router(config)# vrrp version 3
router(config)# vrrp 1
router(config-vrrp)# vrid 1
router(config-vrrp)# virtual-ip 10.10.10.254
router(config-vrrp)# priority 200
router(config-vrrp)# preempt delay 10
router(config-vrrp)# preempt
router(config-vrrp)# accept
router(config-vrrp)# interface LAN10
router(config-vrrp)# tracking ping 192.168.126.150 interval 1 timeout
3 success 3 failure 3
router(config-vrrp)# vrrp
router(config-vrrp)# exit
router(config)#
router(config)# vrrp 2
router(config-vrrp)# vrid 1
router(config-vrrp)# virtual-ip 192.168.126.254
router(config-vrrp)# priority 200
router(config-vrrp)# preempt delay 10
router(config-vrrp)# preempt
router(config-vrrp)# accept
router(config-vrrp)# interface LAN20
router(config-vrrp)# tracking ping 10.10.10.150 interval 1 timeout 3
success 3 failure 3
router(config-vrrp)# vrrp
router(config-vrrp)# exit
```

[On Router B]

```
router# configure
router(config)# router vrrp
router(config)# vrrp version 3
router(config)# vrrp 1
router(config-vrrp)# vrid 1
router(config-vrrp)# virtual-ip 10.10.10.254
router(config-vrrp)# priority 100
router(config-vrrp)# preempt delay 10
router(config-vrrp)# preempt
router(config-vrrp)# accept
router(config-vrrp)# interface LAN10
router(config-vrrp)# vrrp
router(config-vrrp)# exit
router(config)#
router(config)# vrrp 2
router(config-vrrp)# vrid 1
router(config-vrrp)# virtual-ip 192.168.126.254
router(config-vrrp)# priority 100
router(config-vrrp)# preempt delay 10
```

	router(config-vrrp)# preempt router(config-vrrp)# accept router(config-vrrp)# interface LAN20 router(config-vrrp)# vrrp router(config-vrrp)# exit
Error Messages	% Virtual Router ID must be 1 - 255.
	% Priority must be 1 - 254.
	% Preemption must be 10 - 300.
	% Adv_interval must be 1 - 30 (s).
	% Adv_interval must be 10 - 30000 (ms) and divisible by 10.
	% Invalid Track Interface Name.
	% Interval must be 1 - 100 sec.
	% Timeout must be 1 - 100 sec.
	% success_count must be 1 - 100.
	% failure_count must be 1 - 100.
	% Invalid Input Interface Name
	^Parse error
	^Incomplete command
Related Commands	router vrrp vrrp version show vrrp

show vrrp

To check the VRRP settings on the router, use the **show vrrp** command.

Synopsis

show vrrp [**detail**]

Option Description	vrrp	Specifies to display VRRP overall information
	detail	Specifies to display VRRP detailed settings
Defaults	N/A	
Command Modes	Privileged EXEC / User EXEC	
Usage Guidelines	N/A	
Examples	router# show vrrp A indicates enable accept mode | P indicates enable preempt mode | | Interface VRID Prio A P State Master addr VRIP LAN10 1 200 A P MASTER 10.10.10.100 10.10.10.254 LAN20 1 200 A P MASTER 192.168.126.100 192.168.126.254 router# show vrrp detail VRRP State: Enable VRRP Version: 3 Interface LAN10 State: Enable IP Address: 10.10.10.100 VRRP Status: MASTER Virtual IP: 10.10.10.254 Virtual Router ID: 1 Priority: 200 Advertisement Interval (millisec): 100 Accept Mode: Enable Preemption Mode: Enable Preempt Delay (sec): 10 Native Interface Tracking: -- Object Ping Tracking: Target IP: 192.168.126.150 Intervel (sec): 1 Timeout (sec): 3 Success Count: 3 Failure Count: 3 Interface LAN20 State: Enable IP Address: 192.168.126.100 VRRP Status: MASTER Virtual IP: 192.168.126.254 Virtual Router ID: 1 Priority: 200 Advertisement Interval (millisec): 100 Accept Mode: Enable Preemption Mode: Enable Preempt Delay (sec): 10 Native Interface Tracking: -- Object Ping Tracking: Target IP: 10.10.10.150 Intervel (sec): 1 Timeout (sec): 3 Success Count: 3 Failure Count: 3	
Error Messages	^Parse error	
	^Incomplete command	
Related Commands	router vrrp vrrp vrrp version	

3. NAT, VPN, and Firewall Functions

This chapter describes the commands for the NAT, VPN, and firewall function.

Command Modes

Refer to the following table for the command modes.

Mode	Access Method	Prompt	Exit Method	About This Mode
User EXEC	Begin a session with your router by using a normal user account and password.	#	Enter **exit** or **quit**.	Use this mode to • Change terminal settings. • Perform basic tests. • Display system information.
Privileged EXEC	Begin a session with your router by using an admin type user account and password.	#	Enter **exit** or **quit**.	Use this mode to • Change terminal settings. • Perform basic tests. • Display system information. • Enter configuration mode.
Global configuration	While in privileged EXEC mode, enter the **configure** command.	(config)#	To exit to privileged EXEC mode, enter **exit**.	First level to configure main router functions.
Sub-level configuration	While in global configuration mode, use for example **l3l7-policy <firewall-index>** command and press enter	(config-l3l7-policy)#	To exit to global configuration mode, enter **exit**.	A sub-level to configure for example firewall related arguments.

Command Sets

Network Address Translation

Create NAT Rules

ip nat

To create an NAT rule, use the **ip nat** global configuration command and related sub-level configuration command sets. To use the default setting, use **no** form of this sub-level configuration command.

Synopsis

Create / Disable NAT index

(config)# **ip nat** [<nat-index>]
(config)# **no ip nat** <nat-index> **enable**

Set / Clear the NAT mode.

(config-nat)# **mode** {**1-1** |
n-1 |
pat |
advance}

(config-nat)# **no mode**

Set / Clear Auto Create Source NAT (For mode 1-1 only).

(config-nat)# **source-nat**
(config-nat)# **no source-nat**

Set original interface configuration

(config-nat)# **original in-iface** <in-ifname> **src-ip** <s-ip-addr> **src-port** <s-port> **dst-ip** <d-ip-addr> **dst-port** <d-port>

Set translated interface configuration

(config-nat)# **translated out-iface** <out-ifname> **src-ip** <s-ip-addr> **src-port** <s-port> **dst-ip** <d-ip-addr> **dst-port** <d-port>

Set / Clear protocol. (For mode PAT, Advance only)

(config-nat)# **protocol** <pro-list>
(config-nat)# **no protocol**

Set /Clear NAT description

(config-nat)# **desc** <description>
(config-nat)# **no desc**

Set / Clear VRRP redundancy. (For mode 1-1 only)

(config-nat)# **redundancy** <vrrp-id>
(config-nat)# **no redundancy**

Set NAT rule enabled /disabled in sub-level configuration

(config-nat)# **enable**
(config-nat)# **no enable**

Set / Clear NAT Loopback. (For mode 1-1, PAT only).

(config-nat)# **nat-loopback**

(config-nat)# **no nat-loopback**

Set / Clear Double NAT (For mode 1-1, PAT only).
(config-nat)# **double-nat**
(config-nat)# **no double-nat**

Show NAT configuration
(config-nat)# **show**

Abort NAT configuration
(config-nat)# **abort**

Save and Exit NAT configuration.
(config-nat)# **exit**

Option Description	nat	Specifies NAT configuration. If <nat-index> is not given, a new NAT rule will be created and appended to the end of the list.
	nat-index	Index of existing NAT rule. New NAT rule will be created at this position and original index after this value will be incremented by 1.
	mode	Specifies to select NAT mode
	1-1	1-to-1 NAT
	n-1	N-to-1 NAT
	pat	Port forward NAT
	advance	Advanced NAT
	source-nat	Specifies to create Source NAT rule at the same time
	original	Specifies the address/port for incoming packet
	in-iface	Specifies the interface name for incoming packets
	in-ifname	Interface name for incoming packets
	src-ip	Specifies source IP address
	s-ip-addr	Source IP address or a range of IP addresses. e.g., any, 192.168.127.1, 192.168.127.1-192.168.127.200, 192.168.127.0/27
	src-port	Specifies source port
	s-port	Source port number. E.g., any, 80, 90-100
	dst-ip	Specifies destination IP address
	d-ip-addr	Destination IP address or a range of IP addresses. E.g., any, 192.168.127.1, 192.168.127.1-192.168.127.200, 192.168.127.0/27
	dst-port	Specifies destination port
	d-port	Destination port number. E.g., any, 80, 90-100
	translated	Specifies the translated address/port of outgoing packet
	out-iface	Specifies the interface name for outgoing packets
	enable	Specifies to enable this NAT rule
	protocol	Specifies TCP/UDP protocols. Only applicable for PAT and Advance mode.
	pro-list	Specifies one of the protocols or their combinations: {tcp | udp | icmp | tcp,udp | tcp,icmp | udp,icmp | tcp,udp,icmp}
	redundancy	Specifies VRRP index. Only applicable for 1-1 mode.
	vrrp-id	VRRP index.
	desc	Specifies the description of this NAT rule
	description	Description of this NAT rule. Maximum length is 128. Any whitespace is not allowed.
	nat-loopback	Specifies to enable / disable NAT loopback function. This command is used for mode 1-1 and PAT only.
	double-nat	Specifies to enable / disable Double-NAT function. This command is used for mode 1-1 and PAT only.
	show	Display overall settings in this entry before exit.
	abort	Exits sub-level configuration mode without saving any changes.
	exit	Commit new settings and exit sub-level configuration mode.
Defaults	N/A	

Command Modes	Global configuration, sub-level configuration
Usage Guidelines	• No modification function is provided. In case modification on a specific index is required, remove it first and then add a new rule. • Types a valid index to enter sub-level configuration mode. • Maximum number of rules is 512. • Exits the sub-level configuration mode to let settings take effect. • Prior to confirming new NAT settings, utilize the "settingcheck" command to prevent the router from implementing incorrect configurations.

Examples	**1-to-1 NAT with Auto-create Source NAT disabled:**
	
	Prerequisites:
	• TN router:
	- LAN2: 20.0.0.1/24, VLAN ID=2, interface used for internal network
	- LAN3: 30.0.0.1/24, VLAN ID=3, interface used for external network
	• Device(A) on the internal network:
	- IP: 30.0.0.5/24
	- Gateway: 30.0.0.1
	• Device(B) on the external network:
	- IP: 20.0.0.2/24
	- Gateway: 20.0.0.1
	
	Network topology:
	 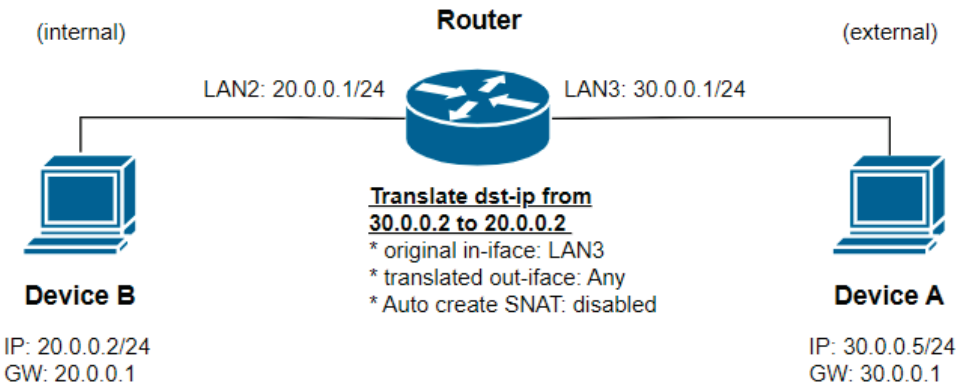
	
	Scenario:
	On the router, the destination IP address 30.0.0.2 of the packet originating from Device (A) will be transformed to 20.0.0.2 before being transmitted to Device (B).
	
	Commands:
	`router# configure`
	`router(config)# ip nat`
	`router(config-nat)# mode 1-1`
	`router(config-nat)# original in-iface LAN3 src-ip any src-port any dst-ip 30.0.0.2 dst-port any`
	`router(config-nat)# translated out-iface any src-ip any src-port any dst-ip 20.0.0.2 dst-port any`
	`router(config-nat)# desc 1to1_woSNAT`
	`router(config-nat)# no source-nat`
	`router(config-nat)# exit`
	
	1-to-1 NAT with Auto-create Source NAT enabled:
	
	Prerequisites:
	• TN router:
	- LAN2: 20.0.0.1/24, VLAN ID=2, interface used for internal network
	- LAN3: 30.0.0.1/24, VLAN ID=3, interface used for external network
	• Device(A) on the internal network:
	- IP: 30.0.0.5/24
	- Gateway: 30.0.0.100

- Device(B) on the external network:
  - IP: 20.0.0.2/24
  - Gateway: 20.0.0.1

Network topology:

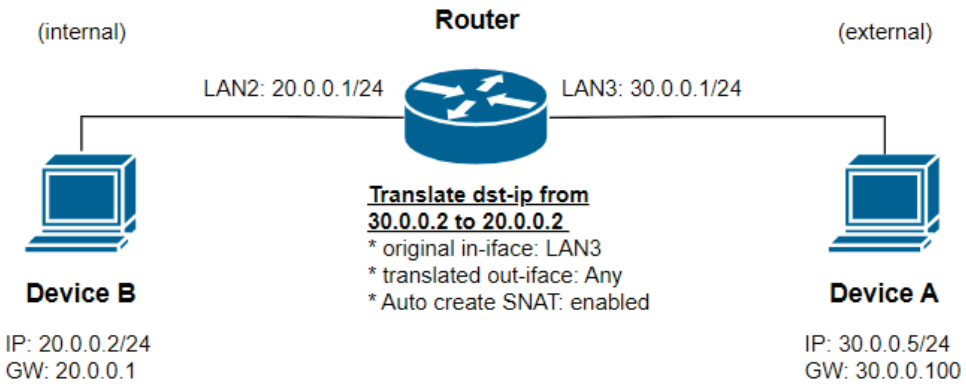

Scenario:

a) On the router, the source IP address 20.0.0.2 of the packet originating from Device (B) will be transformed to 30.0.0.2 before being transmitted to Device (A).

b) On the router, the destination IP address 30.0.0.2 of the packet originating from Device (A) will be transformed to 20.0.0.2 before being transmitted to Device (B).

Commands:

```
router# configure
router(config)# ip nat
router(config-nat)# mode 1-1
router(config-nat)# original in-iface LAN3 src-ip any src-port any
dst-ip 30.0.0.2 dst-port any
router(config-nat)# translated out-iface any src-ip any src-port any
dst-ip 20.0.0.2 dst-port any
router(config-nat)# desc 1to1_wSNAT
router(config-nat)# source-nat
router(config-nat)# exit
```

1-to-1 NAT with range setting and Auto-create Source NAT enabled:

Prerequisites:

- TN router:
  - LAN2: 20.0.0.1/24, VLAN ID=2, interface used for internal network
  - LAN3: 30.0.0.1/24, VLAN ID=3, interface used for external network
- Device(A) on the internal network:
  - IP: 20.0.0.2/24
  - Gateway: 20.0.0.1
- Device(B) on the internal network:
  - IP: 20.0.0.3/24
  - Gateway: 20.0.0.1
- Device(C) on the internal network:
  - IP: 20.0.0.4/24
  - Gateway: 20.0.0.1
- Device(D) on the external network:
  - IP: 30.0.0.5/24
  - Gateway: 30.0.0.1

Network topology:

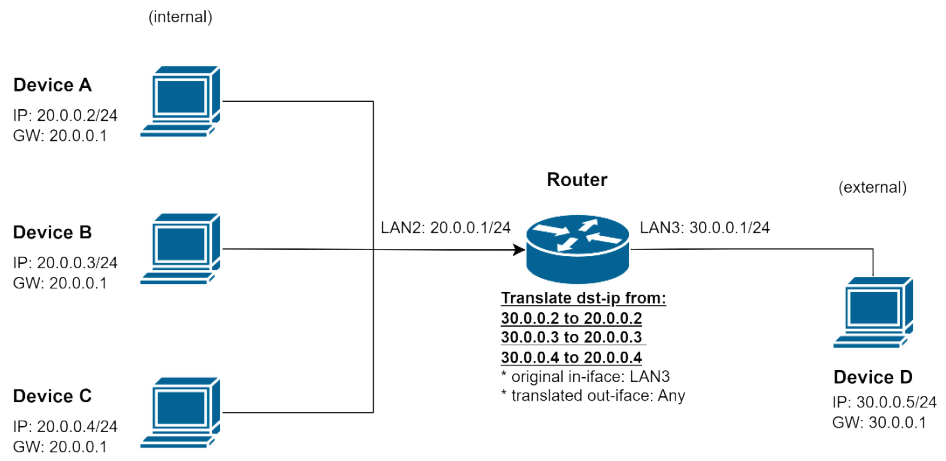

Scenario:
By using the IP range setting of the CLI command, it can achieve the same effect as having three separate individual 1-to-1 NAT rules.

Commands:

```
router# configure
router(config)# ip nat
router(config-nat)# mode 1-1
router(config-nat)# original in-iface LAN3 src-ip any src-port any
dst-ip 30.0.0.2-30.0.0.4 dst-port any
router(config-nat)# translated out-iface any src-ip any src-port any
dst-ip 20.0.0.2-20.0.0.4 dst-port any
router(config-nat)# desc 1to1_range
router(config-nat)# source-nat
router(config-nat)# exit
```

N-to-1 NAT:

Prerequisites:

- TN router:
  - LAN3: 30.0.0.1/24, VLAN ID=3, interface used for external network
  - LAN2: 20.0.0.1/24, VLAN ID=2, interface used for internal network
- Device(A) on the external network:
  - IP: 30.0.0.5/24
- Device(B) on the internal network:
  - IP: 20.0.0.2/24
  - Gateway: 20.0.0.1
- Device(C) on the internal network:
  - IP: 20.0.0.3/24
  - Gateway: 20.0.0.1

Network topology:

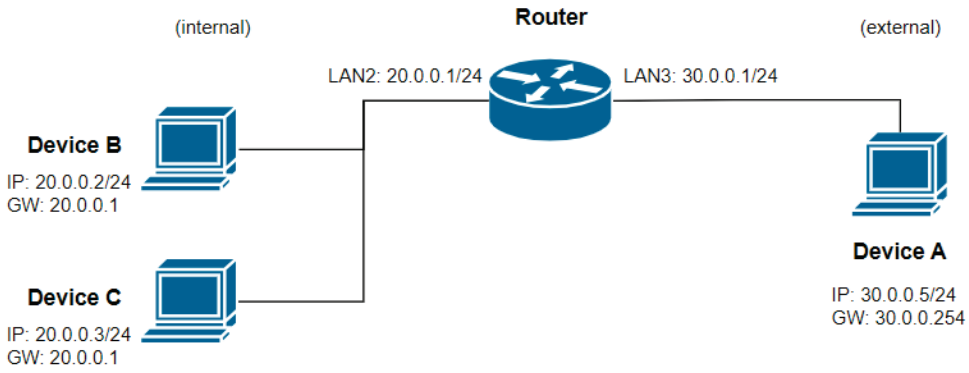

Scenario:
On the router, the source IP address 20.0.0.2 or 20.0.0.3 of the packet originating from Device (B) or Device (C) will be transformed to 30.0.0.1 (masquerading) before being transmitted to Device (A).

Commands:

```
router# configure
router(config)# ip nat
router(config-nat)# mode n-1
router(config-nat)# original in-iface any src-ip 20.0.0.2-20.0.0.4
src-port any dst-ip any dst-port any
router(config-nat)# translated out-iface LAN3 src-ip any src-port any
dst-ip any dst-port any
router(config-nat)# desc n-1_example
router(config-nat)# exit
```

Port forward:

Prerequisites:

- TN router:
  - LAN3: 30.0.0.1/24, VLAN ID=3, interface used for external network
  - LAN2: 20.0.0.1/24, VLAN ID=2, interface used for internal network
- Device(A) on the external network:
  - IP: 30.0.0.5/24
  - Gateway: 30.0.0.1
- Device(B) on the internal network:
  - IP: 20.0.0.2/24
  - Gateway: 20.0.0.1
  - SSH port: 22

Network topology:

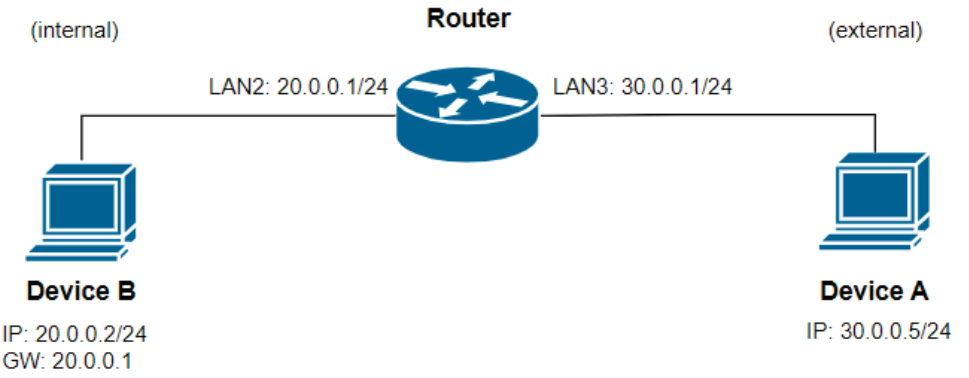

Scenario:
Device(A) can access ssh service on Device(B) via TN router LAN3 and port 2222.

```
Commands:
router# configure
router(config)# ip nat
router(config-nat)# mode pat
router(config-nat)# original in-iface LAN3 src-ip any src-port any
dst-ip any dst-port 2222
router(config-nat)# translated out-iface any src-ip any src-port any
dst-ip 20.0.0.2 dst-port 22
router(config-nat)# protocol tcp
router(config-nat)# desc pat_example
router(config-nat)# exit
```

Using Advance Mode to create 1-to-1 NAT and only IP address 30.0.0.5 is allowed to access the SSH server on Device (B) via virtual IP address 30.0.0.2:

Prerequisites:

- TN router:
  - LAN2: 20.0.0.1/24, VLAN ID=2, interface used for internal network
  - LAN3: 30.0.0.1/24, VLAN ID=3, interface used for external network
- Device(A) on the internal network:
  - IP: 30.0.0.5/24
  - Gateway: 30.0.0.1
- Device(B) on the external network:
  - IP: 20.0.0.2/24
  - Gateway: 20.0.0.1
  - SSH server

Network topology:

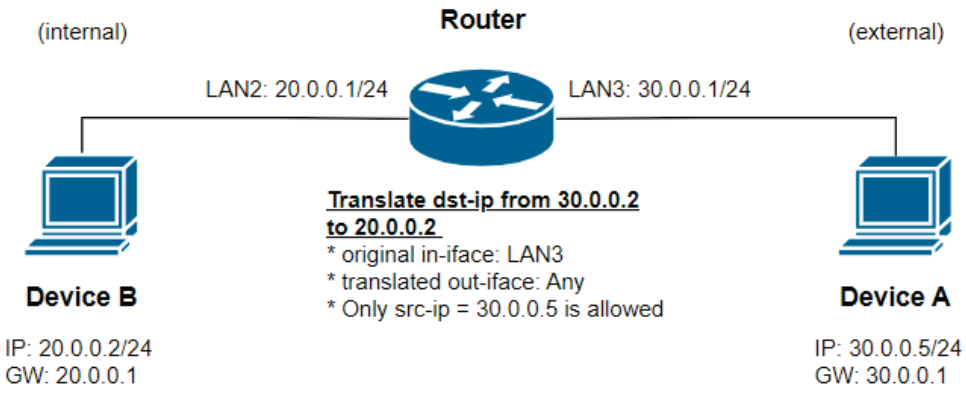

Scenario:
a) On the router, the destination IP address 30.0.0.2 of the packet originating from Device (A) will be transformed to 20.0.0.2 before being transmitted to Device (B) when the source IP is 30.0.0.5.
b) Only Device (A) can access ssh service on Device (B).
c) Other devices from external network cannot access ssh service on Device (B).

Commands:

```
router# configure
router(config)# ip nat
router(config-nat)# mode advance
router(config-nat)# original in-iface LAN3 src-ip 30.0.0.5 src-port
any dst-ip 30.0.0.2 dst-port any
router(config-nat)# translated out-iface any src-ip any src-port any
dst-ip 20.0.0.2 dst-port any
```

	router(config-nat)# desc advance_example router(config-nat)# protocol tcp router(config-nat)# exit Apart from the aforementioned command, it is also necessary to manually create a secondary IP address (30.0.0.2) on LAN3: router(config)# interface vlan 3 router(config-vif)# ip address 30.0.0.2 255.255.255.0 secondary router(config-vif)# exit
Error Messages	- Ranged Translated Destination IP (), Original Destination IP () mismatch is forbidden
	% Invalid in-iface Interface Name.
	% Invalid format
	% Invalid Protocol. It must be tcp, udp or select multiple protocol with ",".
	% is over length. It must be 1 - 128.
	% is not a valid mode.
	^Parse error
	^Incomplete command
Related Commands	no ip nat show ip nat settingcheck

Delete NAT Rules

no ip nat

To remove the NAT rules, use the **no ip nat** global configuration command.

Synopsis

(config)# **no ip nat** <nat-index>

Option Description	nat-index	Index of existing NAT rule
Defaults	N/A	
Command Modes	Global configuration	
Usage Guidelines	N/A	
Examples	Delete an existing NAT rule: Prerequisites: • TN router: - There exists 4 NAT rules before deletion. Scenario: The 3rd NAT rule is outdated and needs to be removed. Commands: router# configure router(config)# no ip nat 3 router(config)# exit	
Error Messages	% Invalid Index. It must be 1 - .	
	^Parse error	
	^Incomplete command	
Related Commands	ip nat show ip nat	

show ip nat

To check the NAT settings on the router, use the **show ip nat** command.

Synopsis

show ip nat

Option Description	nat	Specifies to display all NAT setting
Defaults	N/A	
Command Modes	Privileged EXEC / User EXEC	
Usage Guidelines	N/A	
Examples	router# show ip nat ---------- Index : 1 Enable : Disable Protocol : -- Mode : 1-1bi VRRP Binding : -- Original Incoming Interface : LAN Source IP : -- Source Port : -- Destination IP : 192.168.127.10 Destination Port : -- Translated Outgoing Interface : ALL Source IP : -- Source Port : -- Destination IP : 192.168.6.10 Destination Port : -- ---------- Original Incoming Interface : ALL Source IP : 192.168.6.10 Source Port : -- Destination IP : -- Destination Port : -- Translated Outgoing Interface : LAN Source IP : 192.168.127.10 Source Port : -- Destination IP : -- Destination Port : -- ----------	
Error Messages	^Parse error	
	^Incomplete command	
Related Commands	ip nat no ip nat	

Object Management

object address

To create an IP address object, use the **object address** global configuration command and corresponding sub-level configuration mode commands. To remove the object, use **no** form of this command.

Synopsis

Create a new object of IP address and subnet type and enter the sub-level mode

(config)# **object address**
(config-obj-addr)#

Set / Clear object name

(config-obj-addr)# **name** <name-string>
(config-obj-addr)# **no name**

Remove object of IP address and subnet type

(config)# **no object** <name-string>

Set / Clear object IP address configuration (could be a single IP, or a range of IPs)

(config-obj-addr)# **ip-addr** <ip-string>
(config-obj-addr)# **no ip-addr**

Quit object IP address configuration without saving

(config-obj-addr)# **abort**

Save and Exit object IP address configuration.

(config-obj-addr)# **exit**

Option Description	name	Specifies the object's name
	name-string	A set of characters without a whitespace. Maximum length is 32.
	ip-addr	Specifies the IP address. It could be a single IP or a range of IPs.
	ip-string	E.g. 192.168.127.123, 192.168.127.10-192.168.127.20, 192.168.127.0/24
	abort	Exits sub-level configuration mode without saving any changes.
	exit	Commit new settings and exit sub-level configuration mode.
Defaults	N/A	
Command Modes	Global configuration, sub-level configuration	
Usage Guidelines	• No modification function is provided. In case modification is required, remove it first and then add a new object. • Exits the sub-level configuration mode to let settings take effect. • "uuid" option in this command is reserved for Moxa use only.	

Examples	Create an object of IP address type for Layer 3-7 policy:
	`router# configure`
	`router(config)# object address`
	`router(config-obj-addr)# name ED1`
	`router(config-obj-addr)# ip-addr 192.168.127.1`
	`router(config-obj-addr)# exit`	

Error Messages	% Object named xxx is already existed.	
	% No object named xxx found.	
	% IP Address cannot be empty.	
	% xxx is over length. It must be 1 - 32.	
	% Invalid ipaddr.	
	^Parse error	
	^Incomplete command	
Related Commands	show object	

object service

To create a user-defined service object, use the **object service** global configuration command and corresponding sub-level configuration mode commands. To remove the object, use **no** form of this command.

Synopsis

Create a new object of user-defined service type and enter the sub-level mode

(config)# **object service** {**tcp** | **udp** | **tcpudp** | **icmp** | **ipproto**}
(config-obj-serv)#

Set / Clear object name

(config-obj-serv)# **name** <name-string>
(config-obj-serv)# **no name**

Remove object of user-defined service type

(config)# **no object** <name-string>

Set / Clear object IP protocol configuration (in terms of IP protocol number; only effective while ipproto is selected)

(config-obj-serv)# **ipproto** <proto-number>
(config-obj-serv)# **no ipproto**

Set / Clear object port configuration (any, single, range)

(config-obj-serv)# **port** <port-string>
(config-obj-serv)# **no port**

Set / Clear object ICMP configuration (only effective while icmp is selected)

(config-obj-serv)# **icmp-type** <type-string>
(config-obj-serv)# **icmp-code** <code-string>
(config-obj-serv)# **no icmp**

Quit object user-defined service configuration without saving

(config-obj-serv)# **abort**

Save and Exit object user-defined service configuration.

(config-obj-serv)# **exit**

Option Description	tcp	Specifies TCP protocol
	udp	Specifies UDP protocol
	tcpudp	Specifies TCP & UDP protocols
	icmp	Specifies ICMP protocol
	ipproto	Specifies a custom IP protocol
	name	Specifies the object's name
	name-string	A set of characters without a whitespace. Maximum length is 32.
	proto-number	IP protocol number. Ranges from 0 to 255.
	icmp-type	Specifies the type of ICMP message
	type-string	E.g. any, 8
	icmp-code	Specifies the code of ICMP message
	code-string	E.g. any, 0
	port	Specifies the port number(s)
	port-string	E.g. any, 100, 60001-60999
	abort	Exits sub-level configuration mode without saving any changes.
	exit	Commit new settings and exit sub-level configuration mode.
Defaults	N/A	
Command Modes	Global configuration, sub-level configuration	

Usage Guidelines	• No modification function is provided. In case modification is required, remove it first and then add a new object. • Exits the sub-level configuration mode to let settings take effect.

Examples	Create an object of user-defined service type for Layer 3-7 policy:
	`router# configure`
	`router(config)# object service tcpudp`
	`router(config-obj-serv)# name User-defined-Service1`
	`router(config-obj-serv)# port 8888`
	`router(config-obj-serv)# exit`

Error Messages	% Object named xxx is already existed.
	% No object named xxx found.
	% Unknown Service Type xxx
	% Port Format Error.
	% xxx is over length. It must be 1 - 32.
	% Cannot set IP Protocol if Object Service Type is not ipproto.
	% Cannot set ICMP Type if Object Service Type is not icmp.
	% Cannot set ICMP Code if Object Service Type is not icmp.
	^Parse error
	^Incomplete command
Related Commands	show object

object network-service

To create a network service object, use the **object network-service** global configuration command and corresponding sub-level configuration mode commands. To remove the object, use **no** form of this command.

Synopsis

Create a new object of network service and enter the sub-level mode

(config)# **object network-service**
(config-obj-net-serv)#

Set / Clear object name

(config-obj-net-serv)# **name** <name-string>
(config-obj-net-serv)# **no name**

Remove object of network service type

(config)# no object <name-string>

Select / Clear pre-defined object configuration

(config-obj-net-serv)# **select** {**list** | <obj-name>}
(config-obj-net-serv)# **no select** <obj-name>

Show selected pre-defined object

(config-obj-net-serv)# **show**

Quit object network service configuration without saving

(config-obj-net-serv)# **abort**

Save and Exit object network service configuration.

(config-obj-net-serv)# **exit**

Option Description	name	Specifies the object's name
	name-string	A set of characters without a whitespace. Maximum length is 32.
	select	Specifies to select a pre-defined network service object
	list	Specifies to list available objects

	obj-name	List of available network service objects: Name Detail --- Remote-Access ├ WINS TCP 1512; UDP 1512 ├ TELNET TCP 23 └ SSH TCP 22 Remote-Desktop ├ PC-Anywhere TCP 5631; UDP 5632 ├ Chrome-Remote-Desktop UDP 5222 ├ AnyDesk TCP 6568, 7070; UDP 50001-50003 ├ Teamviewer TCP 5938 ├ RDP TCP 3389 ├ VNC TCP 5900 └ X-WINDOW TCP 6000-6063 Email ├ IMAP TCP 143 ├ IMAPS TCP 993 ├ POP3 TCP 110 ├ POP3S TCP 995 ├ SMTP TCP 25 └ SMTPS TCP 465 File-Transfer ├ FTP TCP 21 ├ FTPS TCP 990 ├ SFTP TCP 115; UDP 115 ├ TFTP UDP 69 ├ NFS TCP 111, 2049; UDP 111, 2049 ├ SAMBA TCP 139 ├ AFS3 TCP 7000-7009; UDP 7000-7009 └ SMB TCP 445 Web-Access ├ HTTP TCP 80 └ HTTPS TCP 443 Network-Service ├ BGP TCP 179 ├ DHCP UDP 67 ├ DHCP6 UDP 546 ├ DNS TCP 53; UDP 53 ├ NTP TCP 123; UDP 123 ├ ICMP-PING ICMP Type Any Code Any ├ OSPF IP Protocol 89 ├ RIP TCP 520 ├ SNMP TCP 161-162; UDP 161-162 └ SYSLOG UDP 514 Authentication ├ LDAP TCP 389; UDP 389 ├ LDAPS TCP 636; UDP 636 ├ RADIUS UDP 1812-1813 └ TACACS+ TCP 49; UDP 49 VOIP-and-Streaming ├ SIP TCP 5060; UDP 5060 └ RSTP TCP 554, 7070, 8554; UDP 554 SQL-Server ├ MS-SQL TCP 1433-1434 └ MYSQL TCP 3306

		You can select Remote-Access to represent selecting WINS, TELNET and SSH individually.
	show	Display overall settings in this entry before exit.
	abort	Exits sub-level configuration mode without saving any changes.
	exit	Commit new settings and exit sub-level configuration mode.
Defaults	N/A	
Command Modes	Global configuration, sub-level configuration	
Usage Guidelines	• No modification function is provided. In case modification is required, remove it first and then add a new object. • Exits the sub-level configuration mode to let settings take effect.	

Examples	Create an object of Network-Service type for Layer 3-7 policy:
	`router# configure`
	`router(config)# object network-service`
	`router(config-obj-net-serv)# name NetworkSrv1`
	`router(config-obj-net-serv)# select File-Transfer`
	`router(config-obj-net-serv)# exit`	

Error Messages	% Object named xxx is already existed.	
	% No network service object named xxx was found.	
	% xxx is over length. It must be 1 - 32.	
	% Please at least select one object.	
	^Parse error	
	^Incomplete command	
Related Commands	show object	

object industrial-application-service

To create an industrial application service object, use the **object industrial-application-service** global configuration command and corresponding sub-level configuration mode commands. To remove the object, use **no** form of this command.

Synopsis

Create a new object of industrial application service type and enter the sub-level mode

(config)# **object industrial-application-service**
(config-obj-indust-app)#

Set / Clear object name

(config-obj-indust-app)# **name** <name-string>
(config-obj-indust-app)# **no name**

Remove object of industrial application service type

(config-obj-indust-app)# **no object** <name-string>

Select / Clear pre-defined object configuration

(config-obj-indust-app)# **select** {**list** | <obj-name>}
(config-obj-indust-app)# **no select** <obj-name>

Show selected pre-defined object

(config-obj-indust-app)# show

Quit object industrial application service configuration without saving

(config-obj-indust-app)# **abort**

Save and Exit object industrial application service configuration.

(config-obj-indust-app)# **exit**

<table>
<tr><td rowspan="9">Option Description</td><td>name</td><td>Specifies the object’s name</td></tr>
<tr><td>name-string</td><td>A set of characters without a whitespace. Maximum length is 32.</td></tr>
<tr><td>select</td><td>Specifies to select an industrial application service object</td></tr>
<tr><td>list</td><td>Specifies to list available objects</td></tr>
<tr><td>obj-name</td><td>List of available industrial application service objects:

Name Detail

Modbus TCP 502; UDP 502
DNP3 TCP 20000
IEC-60870-5-104 TCP 2404
IEC-61850-MMS TCP 102
OPC-DA TCP 135
OPC-UA TCP 4840; UDP 4840
CIP-EtherNet/IP TCP 44818; UDP 2222
Siemens-Step7 TCP 102
Moxa-RealCOM TCP 950-981
Moxa-MXview-Request TCP 161, 162, 443, 4000; UDP 4000, 40404</td></tr>
<tr><td>show</td><td>Display overall settings in this entry before exit.</td></tr>
<tr><td>abort</td><td>Exits sub-level configuration mode without saving any changes.</td></tr>
<tr><td>exit</td><td>Commit new settings and exit sub-level configuration mode.</td></tr>
<tr><td>Defaults</td><td colspan="2">N/A</td></tr>
<tr><td>Command Modes</td><td colspan="2">Global configuration, sub-level configuration</td></tr>
<tr><td>Usage Guidelines</td><td colspan="2">• No modification function is provided. In case modification is required, remove it first and then add a new object.
• Exits the sub-level configuration mode to let settings take effect.</td></tr>
<tr><td>Examples</td><td colspan="2">Create an object of Industrial-Application-Service type for Layer 3-7 policy:
<code>router# configure</code>
<code>router(config)# object industrial-application-service</code>
<code>router(config-obj-indust-app)# name Industrial-app-service1</code>
<code>router(config-obj-indust-app)# select Modbus</code>
<code>router(config-obj-indust-app)# exit</code></td></tr>
<tr><td rowspan="7">Error Messages</td><td colspan="2">% Object named xxx is already existed.</td></tr>
<tr><td colspan="2">% No object named xxx found.</td></tr>
<tr><td colspan="2">% No network service object named xxx was found.</td></tr>
<tr><td colspan="2">% xxx is over length. It must be 1 - 32.</td></tr>
<tr><td colspan="2">% Please at least select one object.</td></tr>
<tr><td colspan="2">^Parse error</td></tr>
<tr><td colspan="2">^Incomplete command</td></tr>
<tr><td>Related Commands</td><td colspan="2">show object</td></tr>
</table>

show object

To check the object settings on the router, use the **show object** command.

Synopsis

show object

Option Description	object	Specifies to display object list
Defaults	N/A	
Command Modes	Privileged EXEC / User EXEC	
Usage Guidelines	N/A	
Examples	router# show object Name Detail --- obj1 Network-Service ED1 192.168.10.1 User-defined-Service1 TCP 8888; UDP 8888 NetworkSrv1 File-Transfer Industrial-app-service1 Modbus	
Error Messages	^Parse error	
	^Incomplete command	
Related Commands	object address object service object network-service object industrial-application-service	

Firewall

Layer 2 Policy

l2-filter

To create a firewall layer 2 policy rule, use the **l2-filter** global configuration command and corresponding sub-level configuration mode commands. To remove the firewall layer 2 policy, use **no** form of this command.

Synopsis

Create / Remove Layer 2 policy index

(config)# **l2-filter** <l2-index>
(config)# **no l2-filter** <l2-index>

Enable / Disable Layer 2 policy.

(config)# **l2-filter** <l2-index> {**enable** |
disable}

Set Layer 2 policy action in sub-level configuration mode

(config-l2filter)# **action** {**accept** |
drop }

Set Layer 2 policy EtherType protocol in sub-level configuration mode

(config-l2filter)# **protocol** {**all** |
manual} |
list |
<pro-opts>}

Set Layer 2 policy EtherType string in sub-level configuration mode

(config-l2filter)# **ether-type** <type-string>

Set Layer 2 policy source MAC address in sub-level configuration mode

(config-l2filter)# **src-mac** <mac>

Set Layer 2 policy destination MAC address in sub-level configuration mode

(config-l2filter)# **dst-mac** <mac>

Set Layer 2 policy logging enabled / disabled in sub-level configuration mode

(config-l2filter)# **logging**
(config-l2filter)# **no logging**

Set Layer 2 policy log severity in sub-level configuration mode

(config-l2filter)# **logging severity** <severity-level>

Set / Clear Layer 2 policy log destination in sub-level configuration mode (for multiple logging destinations, use different arguments separately)

(config-l2filter)# **logging** {**syslog** |
flash}
(config-l2filter)# **no logging** {**syslog** |
flash}

Set Layer 2 policy "from" and "to" interfaces in sub-level configuration mode

(config-l2filter)# **interface** <if-from> <if-to>

Save and Exit Layer 2 policy configuration.

(config-l2filter)# **exit**

Option Description	l2-index	Could be one of below cases: 1. Index of existing Layer 2 policy: New Layer 2 policy will be created at this position and original index after this value will be incremented by 1. 2. A new index: New index value should be the last existing index value plus 1.
	exit	Commit new settings and exit sub-level configuration mode.
	action	Specifies the action when the packet matches the firewall policy
	accept	Accepts the packet
	drop	Drops the packet
	protocol	Specifies ether-type, all or manual
	all	Specifies all listed layer 2 protocols
	manual	Specifies one of listed layer 2 protocols
	list	Specifies to list available protocol options
	pro-opts	Uses one of below protocol options: {ipv4 | x25 | arp | frame-relay-arp | g8bpq-ax-25-ethernet-packet | dec-assigned-proto | dec-dna-dump-load | dec-dna-remote-console | dec-dna-routing | dec-lat | dec-diagnostics | dec-customer-use | dec-systems-comms-arch | trans-ether-bridging | raw-frame-relay | appletalk-aarp | appletalk | 802-1q-virtual-lan-tagged-frame | novell-ipx | netbeui | ip-version-6 | ppp | multiprotocol-over-atm | pppoe-discovery-messages | pppoe-session-messages | frame-based-atm-transport-over-ethernet | loopback}
	ether-type	Specifies ether-type
	type-string	Include one of below strings: { 0x0800 | 0x0805 | 0x0806 | 0x0808 | 0x08FF | 0x6000 | 0x6001 | 0x6002 | 0x6003 | 0x6004 | 0x6005 | 0x6006 | 0x6007 | 0x6558 | 0x6559 | 0x80F3 | 0x809B | 0x8100 | 0x8137 | 0x8191 | 0x86DD | 0x880B | 0x884C | 0x8863 | 0x8864 | 0x8884 | 0x9000}
	src-mac	Specifies to check source MAC address in the packet
	mac	MAC address
	dst-mac	Specifies to check destination MAC address in the packet
	logging	Specifies logging settings for the policy
	severity	Specifies severity of logging
	severity-level	Specifies an integer for: {Emergency(0) | Alert(1) | Critical(2) | Error(3) | Warning(4) | Notice(5) | Information(6) | Debug(7)}
	flash	Specifies writing event logs into flash.
	syslog	Specifies sending event logs to syslog server
	interface	Specifies From and To interfaces
	if-from	ALL or Port ID (consists of module/port-number). e.g. 1/5
	if-to	ALL or Port ID (consists of module/port-number). e.g. 1/5
Defaults	N/A	
Command Modes	Global configuration, sub-level configuration	
Usage Guidelines	• No modification function is provided. In case modification on a specific index is required, remove it first and then add a new policy. • Command # **protocol manual** is required when configuring a specific ether-type. • Types a valid index to enter sub-level configuration mode. • Exits the sub-level configuration mode to let settings take effect. • Network interfaces related to this firewall feature must be created in advance. • Layer 2 policy priority is higher than the Layer 3 policy.	

Examples	Drop ARP packets from a port-based bridge interface member port PORT7 to PORT8:
	`router# configure`
	`router(config)# l2-filter 1`
	`router(config-l2filter)# action drop`
	`router(config-l2filter)# interface 1/7 1/8`
	`router(config-l2filter)# protocol manual`	

	router(config-l2filter)# ether-type 0x0806 router(config-l2filter)# src-mac 00:00:00:00:00:00 router(config-l2filter)# dst-mac 00:00:00:00:00:00 router(config-l2filter)# exit
Error Messages	% Invalid Input Interface Name.
	% Invalid Output Interface Name.
	% Invalid Protocol.
	^Parse error
	^Incomplete command
Related Commands	show l2-filter

show l2-filter

To check the Layer 2 firewall policy settings on the router, use the **show l2-filter** command.

Synopsis

show l2-filter

Option Description	l2-filter	Specifies to display Layer 2 firewall policy list
Defaults	N/A	
Command Modes	Privileged EXEC / User EXEC	
Usage Guidelines	N/A	
Examples	router# show l2-filter Index :1 State :Enable Action :DROP Interface :from wan to wan Protocol :0x0806 Source MAC :00:00:00:00:00:00 Destination MAC :00:00:00:00:00:00 ACTION :DROP	
Error Messages	^Parse error	
	^Incomplete command	
Related Commands	l2-filter	

Layer 3 - 7 Policy

l3l7-policy

To create a Layer 3-7 firewall policy, use the **l3l7-policy** global configuration command and corresponding sub-level configuration mode commands. To remove the firewall policy, use **no** form of this command.

Synopsis

Create / Remove Layer 3-7 policy index (without <firewall-index>, a new index will be created in sequence)
(config)# **l3l7-policy** [<firewall-index>]
(config)# **no l3l7-policy** <firewall-index>

Enable / Disable Layer 3-7 policy globally or set default action.
(config)# **l3l7-policy** {**enable** |
disable |
default-action {**allow** | **deny**}}

Set Layer 3-7 policy enabled / disabled in sub-level configuration mode
(config-l3l7-policy)# **enable**
(config-l3l7-policy)# **no enable**

Set / Clear Layer 3-7 policy name in sub-level configuration mode
(config-l3l7-policy)# **name** <name-string>
(config-l3l7-policy)# **no name**

Set / Clear Layer 3-7 policy description in sub-level configuration mode
(config-l3l7-policy)# **description** <desc>
(config-l3l7-policy)# **no description**

Set Layer 3-7 policy logging enabled / disabled in sub-level configuration mode
(config-l3l7-policy)# **logging**
(config-l3l7-policy)# **no logging**

Set / Clear Layer 3-7 policy logging in sub-level configuration mode (for multiple logging destinations, use different arguments separately)
(config-l3l7-policy)# **logging** {**severity** <severity-level>|
flash |
syslog |
trap}
(config-l3l7-policy)# **no logging** {**flash** |
syslog |
trap}

Set / Clear Layer 3-7 policy interface in sub-level configuration mode
(config-l3l7-policy)# **interface** <if-from> <if-to>
(config-l3l7-policy)# **no interface**

Set Layer 3-7 policy mode in sub-level configuration mode
(config-l3l7-policy)# **mode** {**ip** |
mac |
ip-mac}

Set / Clear Layer 3-7 policy source MAC address in sub-level configuration mode

(config-l3l7-policy)# **src-mac** <mac-addr>
(config-l3l7-policy)# **no src-mac**

Set / Clear Layer 3-7 policy source IP address in sub-level configuration mode

(config-l3l7-policy)# **src-ip** {**list** | <object-name>}
(config-l3l7-policy)# **no src-ip**

Set / Clear Layer 3-7 policy source port in sub-level configuration mode

(config-l3l7-policy)# **src-port** {**list** | <object-name>}
(config-l3l7-policy)# **no src-por**t

Set / Clear Layer 3-7 policy destination IP address in sub-level configuration mode

(config-l3l7-policy)# **dst-ip** {**list** | <object-name>}
(config-l3l7-policy)# **no dst-ip**

Set / Clear Layer 3-7 policy destination port in sub-level configuration mode

(config-l3l7-policy)# **dst-port** {**list** | <object-name>}
(config-l3l7-policy)# **no dst-port**

Set Layer 3-7 policy action in sub-level configuration mode

(config-l3l7-policy)# **action** {**allow** |
deny }

Show Layer 3-7 policy configuration before exit / abort

(config-l3l7-policy)# **show**

Quit Layer 3-7 policy configuration without saving

(config-l3l7-policy)# **abort**

Save and Exit Layer 3-7 policy configuration.

(config-l3l7-policy)# **exit**

Option Description		
	firewall-index	Could be one of below cases: 1. Index of existing firewall policy: New firewall policy will be created at this position and original index after this value will be incremented by 1. 2. A new index: New index value should be the last existing index value plus 1.
	enable	Specifies to enable the Firewall policy
	default-action	Specifies the default action when the packet matches the firewall policy. (allow or deny)
	name	Specifies the Firewall policy's name
	name-string	A set of characters without a whitespace. Maximum length is 32.
	description	Specifies the description of the Firewall rule
	desc	A set of characters without a whitespace. Maximum length is 128.
	logging	Specifies logging settings for the policy
	severity	Specifies severity of logging
	severity-level	Specifies an integer for: {Emergency(0) | Alert(1) | Critical(2) | Error(3) | Warning(4) | Notice(5) | Information(6) | Debug(7)}
	flash	Specifies writing event logs into flash.
	syslog	Specifies sending event logs to syslog server
	trap	Specifies sending event logs via SNMP trap
	interface	Specifies From and To interfaces
	if-from	any or interface name
	if-to	any or interface name

	mode	Specifies filter mode
	ip	IP address filter
	mac	Source MAC filter
	ip-mac	IP and source MAC filter
	src-mac	Specifies to check source MAC address in the packet
	mac-addr	MAC address
	src-ip	Specifies to check source IP addresses in the packet
	list	Lists available objects
	object-name	Pre-defined object
	dst-ip	Specifies to check destination IP addresses in the packet
	src-port	Specifies to check source port in the packet
	dst-port	Specifies to check destination port in the packet
	action	Specifies the action when the packet matches the firewall policy
	allow	Accepts the packet
	deny	Drops the packet
	show	Display overall settings in this entry before exit.
	abort	Exits sub-level configuration mode without saving any changes.
	exit	Commit new settings and exit sub-level configuration mode.
Defaults	N/A	
Command Modes	Global configuration, sub-level configuration	
Usage Guidelines	• No modification function is provided. In case modification on a specific index is required, remove it first and then add a new policy. • Types a valid index to enter sub-level configuration mode. • Exits the sub-level configuration mode to let settings take effect. • Network interfaces related to this firewall feature must be created in advance. • Layer 2 policy priority is higher than the Layer 3 policy. • Create network(service) object(s) in advance so that those object(s) can be used on this firewall policy. • Configure SNMP Trap in advance when sending event logs via SNMP trap. • Configure Syslog server in advance when sending event logs to syslog server. • "uuid" option in this command is reserved for Moxa use only.	

Examples	• Drop all packets from interface LAN10 to LAN20:
	`router# configure`
	`router(config)# l3l7-policy 1`
	`router(config-l3l7-policy)# name dropLAN10`
	`router(config-l3l7-policy)# no logging`
	`router(config-l3l7-policy)# logging severity 4`
	`router(config-l3l7-policy)# logging flash`
	`router(config-l3l7-policy)# no logging syslog`
	`router(config-l3l7-policy)# no logging trap`
	`router(config-l3l7-policy)# interface LAN10 LAN20`
	`router(config-l3l7-policy)# action deny`
	`router(config-l3l7-policy)# mode ip`
	`router(config-l3l7-policy)# enable`
	`router(config-l3l7-policy)# exit`
	
	• Delete L3-7 policy index 1:
	`router# configure`
	`router(config)# no l3l7-policy 1`
	`router(config)# exit`
	
	• Allow all packets from the end device (using pre-defined object "ED1" in this example) to LAN20:
	`router# configure`
	`router(config)# l3l7-policy 2`
	`router(config-l3l7-policy)# name Allow-ED1`
	`router(config-l3l7-policy)# no logging`
	`router(config-l3l7-policy)# logging severity 4`
	`router(config-l3l7-policy)# logging flash`
	`router(config-l3l7-policy)# no logging syslog`
	`router(config-l3l7-policy)# no logging trap`
	`router(config-l3l7-policy)# interface LAN LAN20`
	`router(config-l3l7-policy)# action allow`	

	router(config-l3l7-policy)# mode ip router(config-l3l7-policy)# src-ip ED1 router(config-l3l7-policy)# dst-ip Server1 router(config-l3l7-policy)# enable router(config-l3l7-policy)# exit
Error Messages	% Policy Name is required.
	% xxx is over length. It must be 1 - 32.
	% Invalid Incoming Interface Name.
	% Invalid Outgoing Interface Name.
	% Invalid Policy Index.
	% Invalid Severity Level. (0-7)
	% Object Not Found.
	^Parse error
	^Incomplete command
Related Commands	show l3l7-policy show logging event-log l3l7-policy snmp-server host snmp-server trap-mode logging <ip-addr> settingcheck

show l3l7-policy

To check the Layer 3-7 firewall policy settings on the router, use the **show l3l7-policy** command.

Synopsis

show l3l7-policy

Option Description	l2-filter	Specifies to display Layer 3-7 firewall policy list
Defaults	N/A	
Command Modes	Privileged EXEC / User EXEC	
Usage Guidelines	N/A	

Examples

```
router# show l3l7-policy
Global Policy Settings
------------------------------------------------------------------------
Status                          : Enable
Default Action                  : Deny All

Policy Event Global Setting
------------------------------------------------------------------------
Log                             : Enable

Policy Setting
------------------------------------------------------------------------
Index                           : 1
Status                          : Enable
Name                            : dropLAN10
Description                     :
Incoming Interface              : LAN10
Outgoing Interface              : LAN20
Filter Mode                     : IP/Port Filtering
Source IP Address               : any
Source Port                     : any
Destination IP Address          : any
Destination Port or Protocol    : any
Action                          : Deny
Log                             : Disable
```

	Severity : <4> Warning Local Storage : Enable Syslog Server : Disable SNMP Trap Server : Disable ---------- Index : 2 Status : Enable Name : Allow-ED1 Description : Incoming Interface : LAN Outgoing Interface : LAN20 Filter Mode : IP/Port Filtering Source IP Address : ED1 Source Port : any Destination IP Address : Server1 Destination Port or Protocol : any Action : Allow Log : Disable Severity : <4> Warning Local Storage : Enable Syslog Server : Disable SNMP Trap Server : Disable ----------
Error Messages	^Parse error ^Incomplete command
Related Commands	l3l7-policy show logging event-log l3l7-policy

Malformed Packets

firewall malformed

To enable logging firewall events including dropped malformed packets, use the **firewall malformed** global configuration command. To disable this feature, use **no** form of this command.

Synopsis

(config)# **firewall malformed** [**logging** {**severity** <severity-level>|
flash |
syslog |
trap}]

(config)# **no firewall malformed** [**logging** {**flash** |
syslog |
trap}]

Option Description	malformed	Enables malformed packets function.
	logging	Enables logging function for malformed packets.
	severity	Specifies severity of logging for malformed packet function
	severity-level	Specifies an integer for: {Emergency(0) | Alert(1) | Critical(2) | Error(3) | Warning(4) | Notice(5) | Information(6) | Debug(7)}
	flash	Specifies writing event logs into flash.
	syslog	Specifies sending event logs to syslog server
	trap	Specifies sending event logs via SNMP trap
Defaults	N/A	
Command Modes	Global configuration	
Usage Guidelines	• Network interfaces related to this firewall feature must be created in advance. • Configure SNMP Trap in advance when sending event logs via SNMP trap. • Configure Syslog server in advance when sending event logs to syslog server.	

Examples	Drop malformed packets and set severity of log to Information(6):
	`router# configure`
	`router(config)# firewall malformed`
	`router(config)# firewall malformed logging severity 6`
	`router(config)# exit`	

Error Messages	% Severity level is out of range!	
	^Parse error	
	^Incomplete command	
Related Commands	show firewall show logging event-log firewall snmp-server host snmp-server trap-mode logging <ip-addr>	

show firewall

To check Malformed Packets settings on the router, use the **show firewall** command.

Synopsis

show firewall

Option Description	firewall	Specifies to display Malformed Packets settings
Defaults	N/A	
Command Modes	Privileged EXEC / User EXEC	
Usage Guidelines	This command only displays Malformed Packets settings. If you need to check firewall policy settings, please use the command "show l3l7-policy" instead.	
Examples	router # show firewall Global Setting Log Enable:Enable ---------- Malformed Packets Severity :<0> Emergency Flash :Enable Syslog :Enable Trap :Enable ----------	
Error Messages	^Parse error	
	^Incomplete command	
Related Commands	firewall malformed show logging event-log malformed	

Session Control

session-control

To create a session control policy, use the **session-control** global configuration command and corresponding sub-level configuration mode commands. To remove the session control policy, use **no** form of this command.

Synopsis

Create / Remove session-control policy index (without <index>, a new index will be created in sequence)

(config)# **session-control** [<index>]
(config)# **no session-control** <index>

Set session-control policy enabled / disabled in sub-level configuration mode

(config-session-control)# **enable**
(config-session-control)# **no enable**

Set / Clear session-control policy name in sub-level configuration mode

(config-session-control)# **name** <name-string>
(config-session-control)# **no name**

Set / Clear session-control policy logging in sub-level configuration mode (for multiple logging destinations, use different arguments separately)

(config-session-control)# **logging** {**severity** <severity-level>|
flash |
syslog |
trap}

(config-session-control)# **no logging** {**flash** |
syslog |
trap}

Set / Clear session-control policy destination IP address in sub-level configuration mode

(config-session-control)# **dst-ip** {**list** | <object-name>}
(config-session-control)# **no dst-ip**

Set / Clear session-control policy destination port in sub-level configuration mode

(config-session-control)# **dst-port** {**list** | <object-name>}
(config-session-control)# **no dst-port**

Set session-control policy action in sub-level configuration mode

(config-session-control)# **action** {**monitor** |
drop }

Set / Clear total allowed number of TCP connections in sub-level configuration mode

(config-session-control)# **total-tcp-conn** <number>
(config-session-control)# **no total-tcp-conn**

Set / Clear total allowed number of concurrent TCP requests in sub-level configuration mode

(config-session-control)# **concurrent-tcp-conn** <limit>
(config-session-control)# **no concurrent-tcp-conn**

Show session-control policy configuration before exit / abort

(config-session-control)# **show**

Quit session-control policy configuration without saving

(config-session-control)# **abort**

Save and Exit session-control policy in sub-level configuration mode.

(config-session-control)# **exit**

Option Description	index	Could be one of below cases: 1. Index of existing session-control policy: New policy will be created at this position and original index after this value will be incremented by 1. 2. A new index: New index value should be the last existing index value plus 1.
	enable	Specifies to enable the session control policy
	name	Specifies the session control policy's name
	name-string	A set of characters without a whitespace. Maximum length is 32.
	logging	Specifies logging settings for the policy
	severity	Specifies severity of logging
	severity-level	Specifies an integer for: {Emergency(0) | Alert(1) | Critical(2) | Error(3) | Warning(4) | Notice(5) | Information(6) | Debug(7)}
	flash	Specifies writing event logs into flash.
	syslog	Specifies sending event logs to syslog server
	trap	Specifies sending event logs via SNMP trap
	dst-ip	Specifies to check destination IP addresses in the packet
	dst-port	Specifies to check destination port in the packet
	list	Specifies to list available objects
	object-name	Pre-defined object
	action	Specifies the action when the packet matches the session control policy
	monitor	Monitors the packet
	drop	Drops the packet
	total-tcp-conn	Specifies the total allowed number of TCP connections

	number	Max. number of TCP connections
	concurrent-tcp-conn	Specifies the total allowed number of concurrent TCP requests.
	limit	Connections per second
	show	Display overall settings in this entry before exit.
	abort	Exits sub-level configuration mode without saving any changes.
	exit	Commit new settings and exit sub-level configuration mode.
Defaults	N/A	
Command Modes	Global configuration, sub-level configuration	
Usage Guidelines	• No modification function is provided. In case modification on a specific index is required, remove it first and then add a new policy. • Types a valid index to enter sub-level configuration mode. • Exits the sub-level configuration mode to let settings take effect. • Create network(service) object(s) in advance so that those object(s) can be used on this session control policy. • Configure SNMP Trap in advance when sending event logs via SNMP trap. • Configure Syslog server in advance when sending event logs to syslog server. • "uuid" option in this command is reserved for Moxa use only.	

Examples	• Drop all packets when total TCP connections to Server1 exceeds 10:
	`router# configure`
	`router(config)# session-control 1`
	`router(config-session-control)# name sc-rule1`
	`router(config-session-control)# enable`
	`router(config-session-control)# logging severity 4`
	`router(config-session-control)# logging flash`
	`router(config-session-control)# no logging syslog`
	`router(config-session-control)# no logging trap`
	`router(config-session-control)# action drop`
	`router(config-session-control)# dst-ip Server1`
	`router(config-session-control)# total-tcp-conn 10`
	`router(config-session-control)# exit`
	
	• ▪ Delete session control index 1:
	`router# configure`
	`router(config)# no session-control 1`
	`router(config)# exit`	

Error Messages	% Policy Name is required.	
	% Destination IP is required.	
	% Either Total TCP Connections or Concurrent TCP Requests Limitation needs to be set.	
	% xxx is over length. It must be 1 - 32.	
	% Invalid Policy Index.	
	% Invalid Severity Level. (0-7)	
	% Invalid parameter!	
	% Object Not Found.	
	^Parse error	
	^Incomplete command	
Related Commands	show session-control snmp-server host snmp-server trap-mode logging <ip-addr>	

show session-control

To check the session-control policy settings on the router, use the **show session-control** command.

Synopsis

show session-control

Option Description	session-control	Specifies to display session control policy list
Defaults	N/A	
Command Modes	Privileged EXEC / User EXEC	
Usage Guidelines	N/A	

Examples	`router# show session-control`
	
	`Session Control Policy Setting`
	`----------`
	`Index : 1`
	`Status : Enable`
	`Name : sc-rule1`
	`Destiantion IP : Server1`
	`Destiantion Port : Any`
	`Total TCP Connections Limitation : 10 (Connections)`
	`Concurrent TCP Requests Limitation : -`
	`Action : Drop`
	`Severity : <4> Warning`
	`Local Storage : Enable`
	`Syslog Server : Disable`
	`SNMP Trap Server : Disable`	

Error Messages	^Parse error	
	^Incomplete command	
Related Commands	session-control	

Denial of Service (DoS) Defense

dos

To enable DoS port-scan protection or flood protection, use the **dos** global configuration command. To disable DoS port-scan protection or flood protection, use **no** form of this command.

Synopsis

(config)# **dos** <attack-name> [<limit>]

(config)# **no dos** <attack-name>

Option Description	attack-name	Includes one of below strings: {null-scan | xmas-scan | nmap-xmas-scan | syn-fin-scan | fin-scan | nmap-id-scan | syn-rst-scan | new-tcp-without-syn-scan | icmp-death | syn-flood |arp-flood}
	limit	The limit value (pkt/sec) to activate ICMP-Death/SYN-flood/ARP-flood)
Defaults	N/A	
Command Modes	Global configuration	
Usage Guidelines	N/A	

Examples	Enable xmas-scan port scan protection:
	`router# configure`
	`router(config)# dos xmas-scan`	

Error Messages	% Invalid DoS Attack Name.	
	% Limit bandwidth must be 1 - 4000 pkt/s.	
	^Parse error	
	^Incomplete command	
Related Commands	logging dos show dos	

show dos

To check the DoS settings on the router, use the **show dos** command.

Synopsis

show dos

Option Description	dos	Specifies to display DoS setting information
Defaults	N/A	
Command Modes	Privileged EXEC / User EXEC	
Usage Guidelines	N/A	

Examples	`router # show dos`
	`null-scan : Enable`
	`xmas-scan : Enable`
	`nmap-xmas-scan : Enable`
	`syn-fin-scan : Enable`
	`fin-scan : Enable`
	`nmap-id-scan : Enable`
	`syn-rst-scan : Enable`
	`new-tcp-without-syn-scan: Enable`
	`icmp-death : Enable Limit: 1000(pkt/s)`
	`syn-flood : Enable Limit: 1000(pkt/s)`
	`arp-flood : Enable Limit: 1000(pkt/s)`
	`Severity : <0> Emergency`
	`Flash : Disable`
	`Syslog : Disable`
	`Trap : Enable`	

Error Messages	^Parse error	
	^Incomplete command	
Related Commands	dos logging dos	

Virtual Private Network (VPN)

IPsec Configuration

ipsec

To specify or modify IPsec function on the router, use the **ipsec** global configuration command and related sub-level configuration command sets. To disable or remove IPsec connection, use **no** form of this command.

Synopsis

```
(config)# ipsec {all-connect | nat-t}
(config)# ipsec <ipsec-name>
(config-ipsec)# {exit |
                 l2tp |
                 remote-gateway <remote-ip> |
                 interface <wanif-name> |
                 startup-mode {start | wait} |
                 local-network <loc-ip> <loc-netmask> |
                 local-multi-network <loc-subnet> |
                 remote-network <rem-ip> <rem-netmask> |
                 remote-multi-network <rem-subnet> |
                 identity {address [<addr-loc-ip> <addr-rem-ip>] |
                           fqdn <loc-id> <rem-id> |
                           key-id <loc-key-id> <rem-key-id>|
                           auto} |
                 dpd-action {hold |
                             clear |
                             disable |
                             restart} |
                 dpd-delay <delay-seconds> |
                 dpd-timeout <timeout-seconds>}

(config-ipsec)# no l2tp

(config-ipsec)# phase1
(config-ipsec-phase1)# {ike-mode {main |
                                  aggressive} |
                        ike-version {ikev1 |
                                     ikev2} |
                        auth-mode {psk <psk-key> |
                                   x509 <loc-cert> <rem-cert> |
                                   x509ca <loc-cert>} |
                        encryption <enc-algo> |
                        hash <hash-algo> |
                        dh-group <dh-grps> |
                        life-time <lt-min> |
                        exit}

(config-ipsec)# phase2
(config-ipsec-phase2)# {pfs [<dh-grps>] |
                        encryption <enc-algo> |
                        hash <hash-algo>  |
                        life-time <lt-min> |
                        exit}

(config-ipsec-phase2)# no pfs

(config)# ipsec <ipsec-name> {enable |
                              disable}
```

(config)# **no ipsec** {**all-connect** |
nat-t |
<ipsec-name>}

Option Description		
	all-connect	Enables All IPsec Connection
	nat-t	Enables IPsec NAT-T
	ipsec-name	IPsec connection name. A set of characters without a whitespace. Maximum length is 32.
	exit	Commit new settings and exit sub-level configuration mode.
	l2tp	Enables/disables L2TP tunnel
	remote-gateway	Specifies a remote VPN gateway
	remote-ip	IP address of the remote VPN gateway
	interface	Specifies WAN interface
	wanif-name	wan
	startup-mode	Specifies connection startup mode
	start	This VPN tunnel will actively initiate the connection with the remote VPN gateway.
	wait	This VPN tunnel will wait remote VPN gateway to initiate the connection.
	local-network	Specifies local VPN network
	loc-ip	IP address of the local VPN network
	loc-netmask	Netmask of the local VPN network
	local-multi-network	Specifies local VPN network subnets.
	loc-subnet	Local network subnets. E.g.192.168.127.0/24,....
	remote-network	Specifies remote VPN network
	rem-ip	IP address of the remote VPN network
	rem-netmask	Netmask of the remote VPN network
	remote-multi-network	Specifies remote VPN network subnets
	rem-subnet	Local network subnets. E.g.192.168.127.0/24,....
	identity	Specifies one of four ID types
	address	Specifies "address" as ID type
	addr-loc-ip	Local IP address
	addr-rem-ip	Remote IP address
	fqdn	Specifies "Fully Qualified Domain Name" as ID type
	loc-id	Uses FQDN as local ID
	rem-id	Uses FQDN as remote ID
	key-id	Specifies "Key ID" as ID type
	loc-key-id	Local key-id created by user
	rem-key-id	Remote key-id created by user
	auto	Specifies "auto" as ID type for building connections for use with Cisco's systems.
	dpd-action	Specifies an action when a Dead Peer is detected
	hold	Holds this VPN tunnel
	clear	Clears this VPN tunnel
	disable	Disables Dead Peer Detection
	restart	Restarts this VPN tunnel
	dpd-delay	Specifies a period of dead peer detection messages
	delay-seconds	Delay seconds
	dpd-timeout	Specifies a timeout to check if the connection is alive or not
	timeout-seconds	Timeout seconds
	phase1	Specifies phase1 configuration
	phase2	Specifies phase2 configuration
	ike-mode	Specifies ike-mode
	main	In 'Main' IKE Mode, both the Remote and Local VPN gateway will negotiate which Encryption/Hash algorithm and DH groups can be used in this VPN tunnel.
	aggressive	In "Aggressive" Mode, the Remote and Local VPN gateway will not negotiate the algorithm
	ike-version	Specifies ike-version

	ikev1	Uses IKE version 1 protocol
	ikev2	Uses IKE version 2 protocol
	auth-mode	Specifies authentication mode
	psk	Specifies a pre-shared key
	psk-key	Pre-shared key. A set of characters without a whitespace. Maximum length is 64
	x509	Specifies x509 mode for authentication. Two systems use certificates that users imported in advance in "Local Certificate" as an authentication tool to build an IPsec VPN connection.
	loc-cert	Local Certificate Name
	rem-cert	Remote Certificate Name
	x509ca	Specifies x509ca mode for two systems use certificates that users imported in advance in "Local Certificate", and the CA that users imported in advance in "Trusted CA Certificate" as an authentication tool to build an IPsec VPN connection.
	encryption	Specifies key exchange encryption algorithm
	enc-algo	Specifies one of the encryption algorithms: {**des** | **3des** | **aes128** | **aes192** | **aes256**}
	hash	Specifies hash algorithm in key exchange
	hash-algo	Specifies one of the hash algorithms: {**md5** | **sha1** | **sha256** }
	dh-group	Specifies Diffie-Hellman groups (the Key Exchange group between the Remote and VPN Gateways)
	dh-grps	Specifies an integer for one of the DH groups: {DH 1: 768-bit MODP (**768**) | DH 2: 1024-bit MODP (**1024**) | DH 5: 1536-bit MODP (**1536**) | DH 14: 2048-bit MODP (**2048**)}
	life-time	Specifies key exchange life time
	lt-min	Ranges from 30 to 43200 minutes
	pfs	Enables/disables Packet Forward Secrecy option
	enable	Enables an IPSec VPN Connection
	disable	Disables an IPSec VPN Connection
Defaults	N/A	
Command Modes	Global configuration, sub-level configuration	
Usage Guidelines	• Specifies a non-existing <ipsec-name> will create a new entry of an IPsec connection. • Types a valid name of the VPN tunnel to enter sub-level configuration mode. • Exits the sub-level configuration mode to let settings take effect.	
Examples	**IPsec (Site to Site):** Prerequisites: • TN router A: - WAN: 61.20.223.253/24, VLAN ID=20, WAN interface - LAN10: 10.10.10.254/24, VLAN ID=10, interface used for internal network - L2TP server: disabled • TN router B: - WAN: 61.20.223.254/24, VLAN ID=20, WAN interface - LAN30: 30.10.10.254/24, VLAN ID=30, interface used for internal network - L2TP server: disabled • PC-1: - IP: 10.10.10.160/24 - Gateway: 10.10.10.254 • PC-2 : - IP: 30.10.10.50/24 - Gateway: 30.10.10.254	

Network topology:

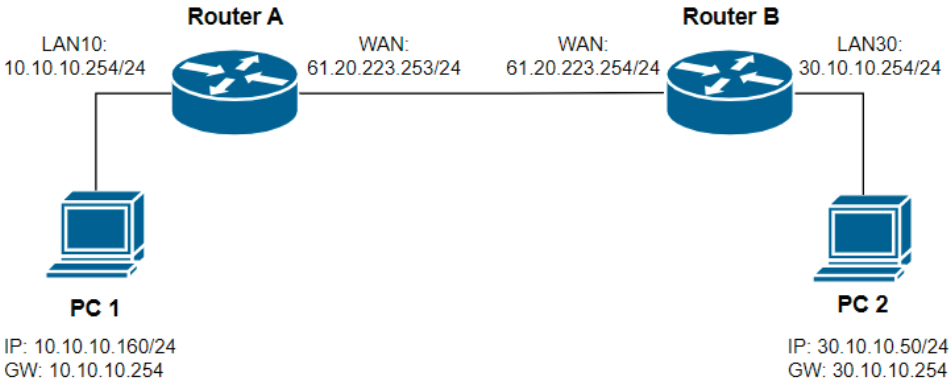

Scenario:
a) Router (A) and Router (B) establish an IPsec VPN site-to-site tunnel.
b) PC (1) and PC (2) can communicate with each other via this VPN site-to-site tunnel.

Commands:
On Router A:

```
router(config)# ipsec all-connect
router(config)# ipsec S2S-A
router(config-ipsec)# remote-gateway 61.20.223.254
router(config-ipsec)# interface WAN
router(config-ipsec)# startup-mode start
router(config-ipsec)# local-multi-network 10.10.10.0/24
router(config-ipsec)# remote-multi-network 30.10.10.0/24
router(config-ipsec)# identity address
router(config-ipsec)# phase1
router(config-ipsec-phase1)# ike-mode main
router(config-ipsec-phase1)# ike-version ikev2
router(config-ipsec-phase1)# auth-mode psk 12345678
router(config-ipsec-phase1)# encryption aes256
router(config-ipsec-phase1)# hash sha256
router(config-ipsec-phase1)# dh-group 2048
router(config-ipsec-phase1)# life-time 43200
router(config-ipsec-phase1)# exit
router(config-ipsec)# phase2
router(config-ipsec-phase2)# pfs 2048
router(config-ipsec-phase2)# encryption aes256
router(config-ipsec-phase2)# hash sha256
router(config-ipsec-phase2)# life-time 43200
router(config-ipsec-phase2)# exit
router(config-ipsec)# dpd-action restart
router(config-ipsec)# dpd-delay 30
router(config-ipsec)# dpd-timeout 120
router(config-ipsec)# exit
router(config)#
```

On Router B:

```
router(config)# ipsec all-connect
router(config)# ipsec S2S-B
router(config-ipsec)# remote-gateway 61.20.223.253
router(config-ipsec)# interface WAN
router(config-ipsec)# startup-mode start
router(config-ipsec)# local-multi-network 30.10.10.0/24
router(config-ipsec)# remote-multi-network 10.10.10.0/24
```

```
router(config-ipsec)# identity address
router(config-ipsec)# phase1
router(config-ipsec-phase1)# ike-mode main
router(config-ipsec-phase1)# ike-version ikev2
router(config-ipsec-phase1)# auth-mode psk 12345678
router(config-ipsec-phase1)# encryption aes256
router(config-ipsec-phase1)# hash sha256
router(config-ipsec-phase1)# dh-group 2048
router(config-ipsec-phase1)# life-time 43200
router(config-ipsec-phase1)# exit
router(config-ipsec)# phase2
router(config-ipsec-phase2)# pfs 2048
router(config-ipsec-phase2)# encryption aes256
router(config-ipsec-phase2)# hash sha256
router(config-ipsec-phase2)# life-time 43200
router(config-ipsec-phase2)# exit
router(config-ipsec)# dpd-action restart
router(config-ipsec)# dpd-delay 30
router(config-ipsec)# dpd-timeout 120
router(config-ipsec)# exit
router(config)#
```

IPsec (Site to Site: with NAT [PAT in the middle]):

Prerequisites:

- TN router A:
  - WAN: 61.20.223.251/24, VLAN ID=20, WAN interface
  - LAN10: 192.168.26.251/24, VLAN ID=10, interface used for internal network
  - Gateway: 61.20.223.254
  - L2TP server: disabled
- TN router B:
  - LAN30: 10.10.10.254/24, VLAN ID=20, WAN interface
  - LAN40: 192.168.27.252/24, VLAN ID=40, interface used for internal network
  - Gateway: 10.10.10.249
  - L2TP server: disabled
- Router C:
  - WAN: 61.20.223.254/24, VLAN ID=20, WAN interface
  - LAN30: 10.10.10.249/24, VLAN ID=30, interface used for internal network
  - NAT: enable PAT
    Translate WAN IP:500 to local 10.10.10.254:500
    Translate WAN IP:4500 to local 10.10.10.254:4500
- PC-1:
  - IP: 192.168.26.19/24
  - Gateway: 192.168.26.251
- PC-2 :
  - IP: 192.168.27.127/24
  - Gateway: 192.168.27.252

Network topology:

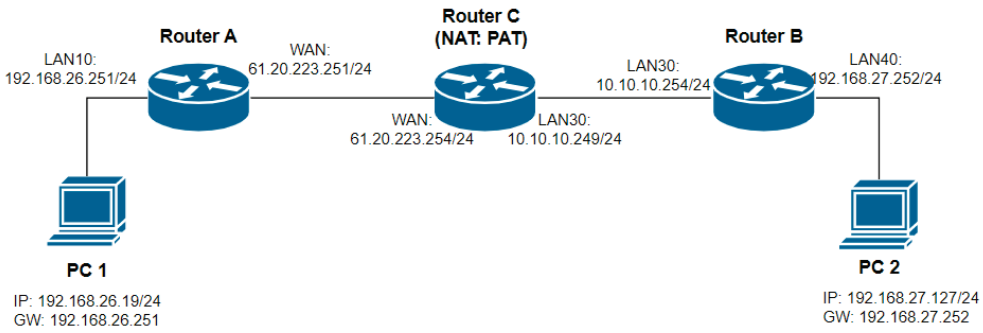

Scenario:
a) Router (A) is the router on the external network which has a public IP address.
b) Router (B) is the router on the internal network which does not have a public IP address.
c) Router (C) enables NAT [PAT mode] to pass through IPsec packets.
d) Router (A) and Router (B) establish an IPsec VPN site-to-site tunnel.
e) PC (1) and PC (2) can communicate with each other via this VPN site-to-site tunnel.

Commands:
On Router A:

```
router(config)# ipsec all-connect
router(config)# ipsec nat-t
router(config)# ipsec S2S-A
router(config-ipsec)# remote-gateway 61.20.223.254
router(config-ipsec)# interface WAN
router(config-ipsec)# startup-mode start
router(config-ipsec)# local-multi-network 192.168.26.0/24
router(config-ipsec)# remote-multi-network 192.168.27.0/24
router(config-ipsec)# identity address 192.168.26.251 192.168.27.252
router(config-ipsec)# phase1
router(config-ipsec-phase1)# ike-mode main
router(config-ipsec-phase1)# ike-version ikev1
router(config-ipsec-phase1)# auth-mode psk 12345678
router(config-ipsec-phase1)# encryption aes256
router(config-ipsec-phase1)# hash sha256
router(config-ipsec-phase1)# dh-group 2048
router(config-ipsec-phase1)# life-time 43200
router(config-ipsec-phase1)# exit
router(config-ipsec)# phase2
router(config-ipsec-phase2)# encryption aes256
router(config-ipsec-phase2)# hash sha256
router(config-ipsec-phase2)# life-time 43200
router(config-ipsec-phase2)# exit
router(config-ipsec)# dpd-action restart
router(config-ipsec)# dpd-delay 30
router(config-ipsec)# dpd-timeout 120
router(config-ipsec)# exit
router(config)#
```

On Router B:

```
router(config)# ipsec all-connect
router(config)# ipsec nat-t
router(config)# ipsec S2S-B
router(config-ipsec)# remote-gateway 61.20.223.251
router(config-ipsec)# interface WAN
router(config-ipsec)# startup-mode start
router(config-ipsec)# local-multi-network 192.168.27.0/24
router(config-ipsec)# remote-multi-network 192.168.26.0/24
router(config-ipsec)# identity address 192.168.27.252 192.168.26.251
router(config-ipsec)# phase1
router(config-ipsec-phase1)# ike-mode main
router(config-ipsec-phase1)# ike-version ikev1
router(config-ipsec-phase1)# auth-mode psk 12345678
router(config-ipsec-phase1)# encryption aes256
router(config-ipsec-phase1)# hash sha256
router(config-ipsec-phase1)# dh-group 2048
router(config-ipsec-phase1)# life-time 43200
router(config-ipsec-phase1)# exit
router(config-ipsec)# phase2
```

```
router(config-ipsec-phase2)# encryption aes256
router(config-ipsec-phase2)# hash sha256
router(config-ipsec-phase2)# life-time 43200
router(config-ipsec-phase2)# exit
router(config-ipsec)# dpd-action restart
router(config-ipsec)# dpd-delay 30
router(config-ipsec)# dpd-timeout 120
router(config-ipsec)# exit
router(config)#
```

IPsec (Site to Site: with NAT [N-to-1 in the middle]):

Prerequisites:

- TN router A:
  - WAN: 61.20.223.251/24, VLAN ID=20, WAN interface
  - LAN10: 192.168.26.251/24, VLAN ID=10, interface used for internal network
  - Gateway: 61.20.223.254
  - L2TP server: disabled
- TN router B:
  - LAN30: 10.10.10.254/24, VLAN ID=20, WAN interface
  - LAN40: 192.168.27.252/24, VLAN ID=40, interface used for internal network
  - Gateway: 10.10.10.249
  - L2TP server: disabled
- Router C:
  - WAN: 61.20.223.254/24, VLAN ID=20, WAN interface
  - LAN30: 10.10.10.249/24, VLAN ID=30, interface used for internal network
  - NAT: enable N-to-1
    Translate local IP: 10.10.10.254 to WAN IP: 61.20.223.254
- PC-1:
  - IP: 192.168.26.19/24
  - Gateway: 192.168.26.251
- PC-2 :
  - IP: 192.168.27.127/24
  - Gateway: 192.168.27.252

Network topology:

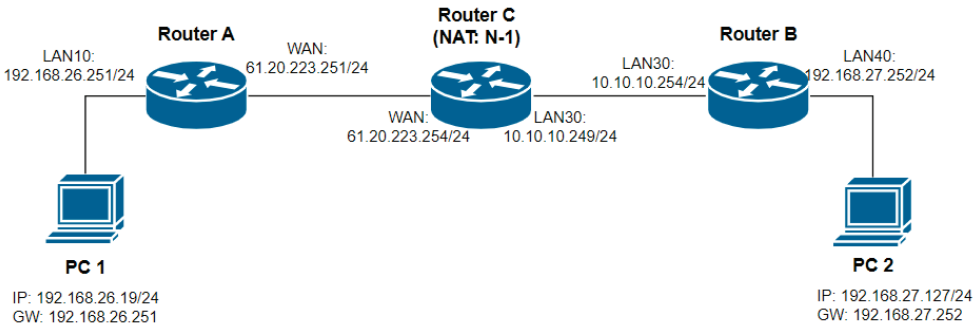

Scenario:

a) Router (A) is the router on the external network which has a public IP address.
b) Router (B) is the router on the internal network which does not have a public IP address.
c) Router (C) enables NAT [N-to-1 mode] to pass through IPsec packets.
d) Router (A) and Router (B) establish an IPsec VPN site-to-site tunnel.
e) PC (1) and PC (2) can communicate with each other via this VPN site-to-site tunnel.

Commands:

On Router A:

```
router(config)# ipsec all-connect
router(config)# ipsec nat-t
router(config)# ipsec S2S-A
router(config-ipsec)# remote-gateway 61.20.223.254
router(config-ipsec)# interface WAN
```

```
router(config-ipsec)# startup-mode start
router(config-ipsec)# local-multi-network 192.168.26.0/24
router(config-ipsec)# remote-multi-network 192.168.27.0/24
router(config-ipsec)# identity address 192.168.26.251 192.168.27.252
router(config-ipsec)# phase1
router(config-ipsec-phase1)# ike-mode main
router(config-ipsec-phase1)# ike-version ikev1
router(config-ipsec-phase1)# auth-mode psk 12345678
router(config-ipsec-phase1)# encryption aes256
router(config-ipsec-phase1)# hash sha256
router(config-ipsec-phase1)# dh-group 2048
router(config-ipsec-phase1)# life-time 43200
router(config-ipsec-phase1)# exit
router(config-ipsec)# phase2
router(config-ipsec-phase2)# encryption aes256
router(config-ipsec-phase2)# hash sha256
router(config-ipsec-phase2)# life-time 43200
router(config-ipsec-phase2)# exit
router(config-ipsec)# dpd-action restart
router(config-ipsec)# dpd-delay 30
router(config-ipsec)# dpd-timeout 120
router(config-ipsec)# exit
router(config)#
```

On Router B:

```
router(config)# ipsec all-connect
router(config)# ipsec nat-t
router(config)# ipsec S2S-B
router(config-ipsec)# remote-gateway 61.20.223.251
router(config-ipsec)# interface WAN
router(config-ipsec)# startup-mode start
router(config-ipsec)# local-multi-network 192.168.27.0/24
router(config-ipsec)# remote-multi-network 192.168.26.0/24
router(config-ipsec)# identity address 192.168.27.252 192.168.26.251
router(config-ipsec)# phase1
router(config-ipsec-phase1)# ike-mode main
router(config-ipsec-phase1)# ike-version ikev1
router(config-ipsec-phase1)# auth-mode psk 12345678
router(config-ipsec-phase1)# encryption aes256
router(config-ipsec-phase1)# hash sha256
router(config-ipsec-phase1)# dh-group 2048
router(config-ipsec-phase1)# life-time 43200
router(config-ipsec-phase1)# exit
router(config-ipsec)# phase2
router(config-ipsec-phase2)# encryption aes256
router(config-ipsec-phase2)# hash sha256
router(config-ipsec-phase2)# life-time 43200
router(config-ipsec-phase2)# exit
router(config-ipsec)# dpd-action restart
router(config-ipsec)# dpd-delay 30
router(config-ipsec)# dpd-timeout 120
router(config-ipsec)# exit
router(config)#
```

Error Messages	
	% is over length. It must be 1 - 32.
	% is not existed in IPSec Connection list.
	% Invalid Netmask.
	% Remote ID can not be NULL.
	% is over length. It must be 1 - 64.

	% No such encryption algorithm.
	% No such hash algorithm.
	% Mod P must be 768, 1024, 1536 or 2048.
	% Invalid IKE Life Time Value. It must be 30 - 43200.
	% is over length. It must be 1 - 32.
	^Parse error
	^Incomplete command
Related Commands	show ipsec show logging event-log vpn

show ipsec

To check the IPsec VPN configuration and status on the router, use the **show ipsec** command.

Synopsis

show ipsec [{**status** |
<ipsec-name>}]

Option Description	ipsec	Specifies to display IPsec VPN connection
	status	Specifies to display IPsec VPN connection status
	ipsec-name	Specifies to display the configuration of this IPsec VPN connection
Defaults	N/A	
Command Modes	Privileged EXEC / User EXEC	
Usage Guidelines	N/A	
Examples	router # show ipsec Global Setting All Connection : Disable NAT-T : Disable VPN Log : Disable Syslog : Disable Trap : Disable Connection List State Name Remote Gateway Local Subnet Remote Subnet ------- --------- --------------- ------------------ ------------ Disable ipst 0.0.0.0 192.168.127.0 /24	
Error Messages	^Parse error	
	^Incomplete command	
Related Commands	ipsec	

show logging event-log vpn

To check the VPN event logs on the router, use the **show logging event-log vpn** command.

Synopsis

show logging event-log vpn [severity <level-range>]

Option Description	vpn	Specifies to display VPN logs
	severity	Specifies to display a specific range of severity levels
	level-range	Severity level ranges 0 to 7. Specifies a range of level. E.g. 1-1, 5-7, ...
Defaults	N/A	
Command Modes	Privileged EXEC / User EXEC	
Usage Guidelines	N/A	

Examples	`router # show logging event-log vpn`
	`VPN Log:  0  message lines logged,`
	`----------`
	`Index  Date  Time  Severity  Event`
	`-----  ----  ----  --------  -----`	

Error Messages	^Parse error	
	^Incomplete command	
Related Commands	ipsec	

L2TP Server

l2tp

To specify or modify L2TP server function on the router, use the **l2tp** global configuration command. To disable L2TP server mode or remove the user, use no form of this command.

Synopsis

(config)# **l2tp** {**interface WAN local-ip** <loc-ip> **offer-ip** <ip1> <ip2> |
user <username> **password** <pwd>}

(config)# **no l2tp** {**interface WAN** |
user <username>}

Option Description	interface	Specifies WAN interface
	local-ip	Specifies IP address of the local subnet
	loc-ip	IP address of the local subnet
	offer-ip	Specifies offered IP ranges
	ip1	IP address 1 as a start of the range
	ip2	IP address 2 as an end of the range
	user	Specifies a user's name for L2TP connection
	username	User's name
	password	Specifies a user's password for L2TP connection
	pwd	User's password
Defaults	N/A	
Command Modes	Global configuration	
Usage Guidelines	Configures WAN interface in advance is required to use this command.	
Examples	L2TP over IPsec (Site to Site(Any)): Prerequisites: • TN router: - WAN: 10.10.10.254/24, VLAN ID=10, WAN interface - LAN20: 192.168.126.100/24, VLAN ID=20, interface used for internal network	

- Layer 3 filter policy: Accept source IP addresses: from 192.168.100.1 to 192.168.100.254

- PC-1 from WAN:
  - IP: 10.10.10.160/24
  - Gateway: 10.10.10.254
- PC-2 on the internal network:
  - IP: 192.168.126.50/24
  - Gateway: 192.168.126.100

Network topology:

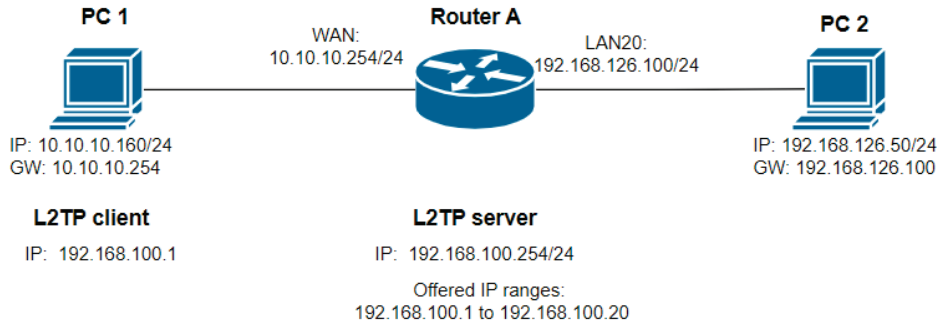

Scenario:

a) Router (A) enables L2TP server and offered IP ranges are from 192.168.100.1 to 192.168.100.20. The VPN user "vpnusr" and password "moxamoxa" is created.
b) Router (A) configures IPsec related settings (such as pre-shared key: 12345678) with L2TP tunnel enabled.
c) PC (1) acts as a L2TP client and gets offered IP 192.168.100.1 from Router (A).
d) PC (1) can start a communication with PC (2) via the IP 192.168.100.1 but fails via the IP 10.10.10.160 because the layer 3 filter policy only accepts the source IP comes from 192.168.100.0/24.

Commands:

```
router(config)# ipsec all-connect
router(config)# ipsec L2TP-test
router(config-ipsec)# l2tp
router(config-ipsec)# interface WAN
router(config-ipsec)# startup-mode wait
router(config-ipsec)# phase1
router(config-ipsec-phase1)# ike-mode main
router(config-ipsec-phase1)# ike-version ikev1
router(config-ipsec-phase1)# auth-mode psk 12345678
router(config-ipsec-phase1)# encryption aes256
router(config-ipsec-phase1)# hash sha256
router(config-ipsec-phase1)# dh-group 2048
router(config-ipsec-phase1)# life-time 43200
router(config-ipsec-phase1)# exit
router(config-ipsec)# phase2
router(config-ipsec-phase2)# encryption aes256
router(config-ipsec-phase2)# hash sha256
router(config-ipsec-phase2)# life-time 43200
router(config-ipsec-phase2)# exit
router(config-ipsec)# dpd-action clear
router(config-ipsec)# dpd-delay 30
router(config-ipsec)# dpd-timeout 120
router(config-ipsec)# exit
router(config)# l2tp interface WAN local-ip 192.168.100.254 offer-ip
192.168.100.1 192.168.100.20
router(config)# l2tp user vpnusr password moxamoxa
router(config)#
```

Error Messages	% is invalid WAN interface name
	% is over length. It must be 1 - 32.
	^Parse error
	^Incomplete command
Related Commands	show l2tp

show l2tp

To check the L2TP server settings on the router, use the **show l2tp** command.

Synopsis

show l2tp

Option Description	l2tp	Specifies to display L2TP server information
Defaults	N/A	
Command Modes	Privileged EXEC / User EXEC	
Usage Guidelines	N/A	

Examples	`router # show l2tp`
	`WAN Server Setting`
	`L2TP Server Mode : Disable`
	`Local IP : 191.0.0.254`
	`Offered IP Range : 191.0.0.1 - 191.0.0.100`
	
	`User Name/Password`
	`User Name : luser1`	

Error Messages	^Parse error	
	^Incomplete command	
Related Commands	l2tp	

4. Layer 2 Functions

This chapter describes the commands for the Layer 2 functions.

Command Modes

Refer to the following table for the command modes.

Mode	Access Method	Prompt	Exit Method	About This Mode
User EXEC	Begin a session with your router by using a normal user account and password.	#	Enter **exit** or **quit**.	Use this mode to • Change terminal settings. • Perform basic tests. • Display system information.
Privileged EXEC	Begin a session with your router by using an admin type user account and password.	#	Enter **exit** or **quit**.	Use this mode to • Change terminal settings. • Perform basic tests. • Display system information. • Enter configuration mode.
Global configuration	While in privileged EXEC mode, enter the **configure** command.	(config)#	To exit to privileged EXEC mode, enter **exit**.	First level to configure main router functions.
Sub-level configuration	While in global configuration mode, use for example **interface ethernet** <mod-port> command and press enter	(config-if)#	To exit to global configuration mode, enter **exit**.	A sub-level to configure for example Ethernet port related arguments.

Command Sets

Port

Port Settings

interface ethernet shutdown

To disable an Ethernet port, use the **interface ethernet** global configuration command and **shutdown** sub-level configuration command. To enable the Ethernet port, use the **no** form of this command.

Synopsis

(config)# **interface ethernet** <mod-port>
(config-if)# {**exit** |
shutdown }

(config-if)# **no shutdown**

Option Description	mod-port	Port ID (consists of module/port-number) or list. E.g. 1/1,2,3,2/1-3,5,...
	exit	Commit new settings and exit sub-level configuration mode.
	shutdown	Disables the Ethernet port.
Defaults	N/A	
Command Modes	Global configuration, sub-level configuration	
Usage Guidelines	N/A	

Examples	• Disable PORT9:
	`router# configure`
	`router(config)# interface ethernet 1/9`
	`router(config-if)# shutdown`
	`router(config-if)# exit`
	
	• Enable PORT9:
	`router# configure`
	`router(config)# interface ethernet 1/9`
	`router(config-if)# no shutdown`
	`router(config-if)# exit`	

Error Messages	% Illegal parameter	
	^Parse error	
	^Incomplete command	
Related Commands	show interfaces ethernet show interfaces trunk	

interface ethernet name

To modify an Ethernet port's name, use the **interface ethernet** global configuration command and **name** sub-level configuration command set. To return to the default name, use the **no** form of this command.

Synopsis

(config)# **interface ethernet** <mod-port>
(config-if)# **name** <token …>

(config-if)# **no name**

Option Description	mod-port	Port ID (consists of module/port-number) or list. E.g. 1/1,2,3,2/1-3,5,...
	name	Specifies the description of the Ethernet port.
	token	A set of characters without a whitespace.
Defaults	N/A	
Command Modes	Global configuration, sub-level configuration	
Usage Guidelines	• 5 tokens are allowed to specify the port's name. • Maximum number of characters including whitespaces is 130	

Examples	Set PORT9's name to "DCU 2":
	`router# configure`
	`router(config)# interface ethernet 1/9`
	`router(config-if)# name DCU 2`
	`router(config-if)# exit`	

Error Messages	% Illegal parameter	
	^Parse error	
	^Incomplete command	
Related Commands	show interfaces ethernet	

interface ethernet speed-duplex

To specify or modify an Ethernet port's speed-duplex, use the **interface ethernet** global configuration command and **speed-duplex** sub-level configuration command set. To return to the default setting, use the **no** form of this command.

Synopsis

(config)# **interface ethernet** <mod-port>
(config-if)# **speed-duplex** {**10M-Full** |
10M-Half |
100M-Full |
100M-Half |
Auto }

(config-if)# **no speed-duplex**

Option Description	mod-port	Port ID (consists of module/port-number) or list. E.g. 1/1,2,3,2/1-3,5,...
	speed-duplex	Specifies speed duplex mode
	10M-Full	Fixed speed duplex mode: 10M-Full
	10M-Half	Fixed speed duplex mode: 10M-Half
	100M-Full	Fixed speed duplex mode: 100M-Full
	100M-Half	Fixed speed duplex mode: 100M-Half
	Auto	Allows the port to use the IEEE 802.3u protocol to negotiate with connected devices.
Defaults	Auto.	
Command Modes	Global configuration, sub-level configuration	
Usage Guidelines	N/A	

Examples	Set PORT9's speed duplex to 100M-Full:
	`router# configure`
	`router(config)# interface ethernet 1/9`
	`router(config-if)# speed-duplex 100M-Full`
	`router(config-if)# exit`	

Error Messages	% Illegal parameter	
	^Parse error	
	^Incomplete command	
Related Commands	show interfaces ethernet	

interface ethernet flowcontrol

To specify or modify an Ethernet port's flowcontrol, use the **interface ethernet** global configuration command and **flowcontrol** sub-level configuration command set. To return to the default setting, use the **no** form of this command.

Synopsis

(config)# **interface ethernet** <mod-port>
(config-if)# **flowcontrol**

(config-if)# **no flowcontrol**

Option Description	mod-port	Port ID (consists of module/port-number) or list. E.g. 1/1,2,3,2/1-3,5,...
	flowcontrol	Enables flow control for this port when the port's Speed is set to Auto.
Defaults	Disabled.	
Command Modes	Global configuration, sub-level configuration	
Usage Guidelines	Set speed-duplex to Auto before enabling flow control.	

Examples	Enable PORT10's flow control:
	`router# configure`
	`router(config)# interface ethernet 1/10`
	`router(config-if)# speed-duplex Auto`
	`router(config-if)# flowcontrol`
	`router(config-if)# exit`	

Error Messages	% Illegal parameter	
	% Force speed can not be set flow control!!	
	^Parse error	
	^Incomplete command	
Related Commands	show interfaces ethernet	

interface ethernet media

To specify or modify an Ethernet port's medium type, use the **interface ethernet** global configuration command and **media** sub-level configuration command set. To return to the default setting, use the **no** form of this command.

Synopsis

(config)# **interface ethernet** <mod-port>
(config-if)# **media cable-mode** {**mdi** |
mdix |
auto}

(config-if)# **no media cable-mode**

Option Description	mod-port	Port ID (consists of module/port-number) or list. E.g. 1/1,2,3,2/1-3,5,...
	media	Specifies the type for medium detection.
	mdi	Specifies MDI
	mdix	Specifies MDIX
	auto	Specifies auto-negotiation
	cable-mode	Returns to default setting
Defaults	Auto	
Command Modes	Global configuration, sub-level configuration	
Usage Guidelines	N/A	

Examples	Set PORT9's medium detection type to MDI:
	`router# configure`
	`router(config)# interface ethernet 1/9`
	`router(config-if)# media cable-mode mdi`
	`router(config-if)# exit`	

Error Messages	% Illegal parameter	
	^Parse error	
	^Incomplete command	
Related Commands	show interfaces ethernet	

interface ethernet poe

To specify a PoE port's settings including power output mode, PD Failure Check and Scheduling, use the **interface ethernet** global configuration command and **poe** sub-level configuration command set. To return to the default setting, use the **no** form of this command.

Synopsis

(config)# **interface ethernet** <mod-port>
(config-if)# **poe** {**enable** |
auto |
force budget <watt> |
high-power |
legacy-pd-detect |
power-priority <priority> |
pdfail [{**ip** <pd-ip>|
periods <sec> |
no-response-timeout <times> |
no-response-action {**no-action** |
reboot-pd |
power-off-pd}}] |
scheduling <rule>}

(config-if)# **no poe** [{**legacy-pd-detect** |
power-priority |
pdfail [{**ip** |
periods |
no-response-timeout |
no-response-action}] |
scheduling}]

Option Description	mod-port	Port ID (consists of module/port-number) or list. E.g. 1/1,2,3,2/1-3,5,...
	poe	Specifies PoE function
	enable	Specifies to enable PoE for the port
	auto	Specifies to set the PoE output mode to Auto
	force budget	Specifies to set the PoE output mode to Force
	watt	Integer for Watt. This value should be between 1 and 36.
	high-power	Specifies to set the PoE output mode to High-Power
	legacy-pd-detect	Specifies to Enable or disable Legacy PD Detection
	power-priority	Specifies the priority of the port to use with the Auto Power Cutting feature.
	priority	Specifies an integer value for priority: {Critical(0) | High(1) | Low(2)}
	pdfail	Specifies to enable / disable PD Failure Check feature
	ip	Specifies IP address for PD failure detection
	pd-ip	PD's IP address
	periods	Specifies how often PD failure checks will run
	sec	Ranges from 5 to 300.
	no-response-timeout	Specifies the maximum number of IP checking cycles to try before determining a PD is not responding.
	times	Ranges from 1 to 10.
	no-response-action	Specifies what action to take when a PD failure is detected
	no-action	Specifies to takes no action
	reboot-pd	Specifies to reboot the PD
	power-off-pd	Specifies to power off PD
	scheduling	Specifies the name for the scheduling rule.
	rule	A rule name for scheduling
Defaults	N/A	
Command Modes	Global configuration, sub-level configuration	

Usage Guidelines	• To proceed with PD Failure Check or Scheduling mentioned in this instruction, it's necessary to have PoE power output enabled beforehand. • To proceed with Scheduling mentioned in this instruction, it's necessary to create a scheduling rule beforehand.

Examples	• Specifies Output mode to Force and allocate 30 watts power for PORT4:
	`router# configure`
	`router(config)# interface ethernet 1/4`
	`router(config-if)# poe enable`
	`router(config-if)# poe force budget 30`
	`router(config-if)# exit`
	
	• Enable PD Failure Check and reboot PD after 5 cycles attempt (20 seconds per cycle) without success for PORT4:
	`router# configure`
	`router(config)# interface ethernet 1/4`
	`router(config-if)# poe pdfail`
	`router(config-if)# poe pdfail ip 192.168.127.100`
	`router(config-if)# poe pdfail periods 20`
	`router(config-if)# poe pdfail no-response-timeout 5`
	`router(config-if)# poe pdfail no-response-action reboot-pd`
	`router(config-if)# exit`
	
	• Apply schedule rule "rule-example" for PORT4:
	`router# configure`
	`router(config)# interface ethernet 1/4`
	`router(config-if)# poe scheduling rule-example`
	`router(config-if)# exit`

Error Messages	% Illegal parameter
	% POE port Watt should be between 1 and 36
	% Power priority should be between 0 and 2.
	% Invalid IP Address.
	% Periods should be between 5 and 300.
	% Cycles should be between 1 and 10.
	% Invalid rule name.
	^Parse error
	^Incomplete command
Related Commands	show interfaces ethernet poe system poe scheduling

VLAN port settings: interface ethernet switchport

To specify or modify VLAN port settings of an Ethernet port, use the **interface ethernet** global configuration command and **switchport** sub-level configuration command sets. To return to the default VLAN setting of the Ethernet port, use the **no** form of this command.

Synopsis

(config)# **interface ethernet** <mod-port>
(config-if)# **switchport** {**access vlan** <vlan-id> |
trunk {**fixed vlan** {**add** | **remove**} <vlan-ids> |
native vlan <vlan-id>} |
hybrid {**fixed vlan** {**add** | **remove**} <vlan-ids> {**tag** | **untag**} |
native vlan <vlan-id>}

(config-if)# **no switchport** {**access vlan** |
trunk {**fixed vlan** |
native vlan} |
hybrid {**fixed vlan** {**tag** | **untag**} |
native vlan}

Option Description	mod-port	Port ID (consists of module/port-number) or list. E.g. 1/1,2,3,2/1-3,5,...
	switchport	Specifies VLAN types
	access vlan	Specifies VLAN type: Access. Connects single devices without tags.
	vlan-id	Ranges from 1 to 4094.
	trunk	Specifies VLAN type: Trunk. Connects another 802.1Q VLAN aware switch.
	fixed vlan	Specifies other VLAN ID for tagged devices that connect to the port.
	vlan-ids	Ranges from 1 to 4094. Use commas to separate different VLAN IDs.
	add	Specifies to add tagged VLAN.
	remove	Specifies to remove tagged VLAN.
	tag	Specifies tagged VLAN IDs
	untag	Specifies untagged VLAN IDs
	native vlan	Specifies the default VLAN ID for untagged devices that connect to the port
	hybrid	Specifies VLAN type: Hybrid. Connects another Access 802.1Q VLAN aware switch or another LAN that combines tagged and/or untagged devices and/or other switches/hubs.
Defaults	• Default native vlan is 1. • Default access vlan is 1.	
Command Modes	Global configuration, sub-level configuration	
Usage Guidelines	• Member ports existing in the specified trunked port is required before entering sub-level configuration mode of this command • Make sure the VLAN ID is created in advance before using it.	

Examples	• Set access VLAN ID (10) to PORT7:
	`router# configure`
	`router(config)# interface ethernet 1/7`
	`router(config-if)# switchport access vlan  10`
	`router(config-if)# exit`
	
	• For Trunk-group 2, change port type from "Access" to "Trunk" and return access VLAN ID to default value 1.
	`router# configure`
	`router(config)# interface trunk 2`
	`router(config-if)# no switchport trunk native vlan`
	`router(config-if)# exit`
	
	• For Trunk-group 2, add a tagged VLAN 5 when trunk type is specified.
	`router# configure`
	`router(config)# interface trunk 2`
	`router(config-if)# switchport trunk fixed vlan add 5`
	`router(config-if)# exit`	

	• For Trunk-group 2, remove all tagged VLAN when trunk type is specified.
	`router# configure`
	`router(config)# interface trunk 2`
	`router(config-if)# no switchport trunk fixed vlan`
	`router(config-if)# exit`

Error Messages	% VLAN id is out of range!
	vlan id does not exist!!
	^Parse error
	^Incomplete command
Related Commands	vlan create show interfaces ethernet

show interfaces ethernet

To check the status of the interfaces, use the **show interfaces ethernet** command.

Synopsis

show interfaces ethernet [<mod-port> [**config** | **rate-limit** | **counters**]]

Option Description	mod-port	Port ID or list. Ex. 1/1,2,3,2/1-3,5,...
	config	Displays port general settings including media type, description, speed, etc for the specified port.
	rate-limit	Displays rate-limit settings for the specified port.
	counters	Displays packet counters including TX, RX for the specified port.
Defaults	N/A	
Command Modes	Privileged EXEC / User EXEC	
Usage Guidelines	N/A	

Examples

- Display overall port settings and status.

```
router# show interfaces ethernet
Port Link    Type    Description  Speed     FDX Flow Ctrl MDI/MDIX
---- ------- ------- ------------ --------- ------------- --------
1/1  Down    1000TX               --        --            --
1/2  Up      1000TX  main port    100M-Full Off           MDI
1/3  Disable 1000TX               --        --            --
1/4  Disable 1000TX               --        --            --
1/5  Down    1000TX  main port 5  --        --            --
1/6  Down    1000TX               --        --            --
1/7  Down    1000TX               --        --            --
1/8  Down    1000TX               --        --            --
```

- Display general settings for port 2.

```
router# show interfaces ethernet 1/2 config
Port Enable Type   Description    Speed    FDX Flow Ctrl MDI/MDIX
---- ------ ------ -------------- -------- ------------- --------
1/2  Yes    100TX  100TX          Auto     Disable       Auto
```

- Display rate-limit settings for port 2.

```
router# # show interfaces ethernet 1/2 rate-limit
Port 1/2:
    Ingress Limit Rate: Not Limited
    Egress Limit Rate : Not Limited
```

- Display packet counter information for port 2.

```
router# show interfaces ethernet 1/2 counters
Port 1/2 (last sample time: 604613 secs ago)
  - TX -
    Unicast Packets      : 421628          +421628
    Multicast Packets    : 20056           +20056
    Broadcast Packets    : 107             +107
    Collision Packets    : 0               +0
  - RX -
```

	Unicast Packets : 365440 +365440 Multicast Packets : 270530 +270530 Broadcast Packets : 36674 +36674 Pause Packets : 0 +0 - Error - TX Late : 0 +0 TX Excessive : 0 +0 RX CRC error : 0 +0 RX Discard : 0 +0 RX Undersize : 0 +0 RX Fragments : 0 +0 RX Oversize : 0 +0 RX Jabber : 0 +0
Error Messages	^Parse error
	^Incomplete command
Related Commands	interface ethernet shutdown interface ethernet name interface ethernet speed-duplex interface ethernet flowcontrol interface ethernet media

Link Aggregation

In order to create and configure trunked ports, two CLI command sets **interface trunk** and **interface ethernet** are required for this purpose.

interface ethernet trunk-group

To add or remove Ethernet ports to the trunked port, use the **interface ethernet** global configuration command and **trunk-group** sub-level configuration command set. To remove the Ethernet port from the trunk group, use the **no** form of this command.

Synopsis

(config)# **interface ethernet** <mod-port>
(config-if)# **trunk-group** <index>

(config-if)# **no trunk-group**

Option Description	mod-port	Port ID (consists of module/port-number) or list. E.g. 1/1,2,3,2/1-3,5,...
	trunk-group	Specifies the trunk-group to be added/removed
	index	Trunk group's index; starting from 1. Maximum number of trunk groups differs among different models.
Defaults	N/A	
Command Modes	Global configuration, sub-level configuration	
Usage Guidelines	N/A	

Examples	Configure PORT11 and PORT12 to be members of trunk group 1:
	`router# configure`
	`router(config)# interface ethernet 1/11`
	`router(config-if)# trunk-group 1`
	`router(config-if)# exit`
	`router(config)# interface ethernet 1/12`
	`router(config-if)# trunk-group 1`
	`router(config-if)# exit`	

Error Messages	% Trunk ID is only allowed from 1 to 4	
	^Parse error	
	^Incomplete command	
Related Commands	interface trunk show interfaces trunk	

interface trunk shutdown

To disable a trunked port, use the **interface trunk** global configuration command and **shutdown** sub-level configuration command. To enable the trunked port, use the **no** form of this command.

Synopsis

(config)# **interface trunk** <trunk-id>
(config-if)# {**exit** |
shutdown }

(config-if)# **no shutdown**

Option Description	trunk-id	Trunk group ID. Maximum number of trunk groups differs among different models.
	exit	Commit new settings and exit sub-level configuration mode.
	shutdown	Disables the trunked port.
Defaults	N/A	
Command Modes	Global configuration, sub-level configuration	
Usage Guidelines	Member ports existing in the specified trunked port is required before entering sub-level configuration mode of this command.	

Examples	Enable trunk group 1 and set VLAN ID (1) to this trunk group:
	`router# configure`
	`router(config)# interface trunk 1`
	`router(config-if)# no shutdown`
	`router(config-if)# switchport access vlan  1`
	`router(config-if)# exit`	

Error Messages	% There is no member in Trunk	
	^Parse error	
	^Incomplete command	
Related Commands	interface ethernet show interfaces trunk	

interface trunk name

To modify a trunked port's name, use the **interface trunk** global configuration command and **name** sub-level configuration command set. To return to the default name, use the **no** form of this command.

Synopsis

(config)# **interface trunk** <trunk-id>
(config-if)# **name** <token …>

(config-if)# **no name**

Option Description	trunk-id	Trunk group ID. Maximum number of trunk groups differs among different models.
	name	Specifies the description of the trunked port.
	token	A set of characters without a whitespace.
Defaults	N/A	
Command Modes	Global configuration, sub-level configuration	
Usage Guidelines	• 5 tokens are allowed to specify the port's name. • Maximum number of characters including whitespaces is 130. • Member ports existing in the specified trunked port is required before entering sub-level configuration mode of this command	

Examples	Specify the name of trunk group 1:
	`router# configure`
	`router(config)# interface trunk 1`
	`router(config-if)# name NewTrk`
	`router(config-if)# exit`	

Error Messages	^Parse error	
	^Incomplete command	
Related Commands	interface ethernet show interfaces trunk	

VLAN port settings: interface trunk switchport

To specify or modify VLAN port settings of a trunked port, use the **interface trunk** global configuration command and **switchport** sub-level configuration command sets. To return to the default VLAN setting of the trunked port, use the **no** form of this command.

Synopsis

(config)# **interface trunk** <trunk-id>
(config-if)# **switchport** {**access vlan** <vlan-id> |
trunk {**fixed vlan** {**add** | **remove**} <vlan-ids> |
native vlan <vlan-id>} |
hybrid {**fixed vlan** {**add** | **remove**} <vlan-ids> {**tag** | **untag**} |
native vlan <vlan-id>}

(config-if)# **no switchport** {**access vlan** |
trunk {**fixed vlan** |
native vlan} |
hybrid {**fixed vlan** {**tag** | **untag**} |
native vlan}

Option Description	trunk-id	Trunk group ID. Maximum number of trunk groups differs among different models.
	switchport	Specifies VLAN types
	access vlan	Specifies VLAN type: Access. Connects single devices without tags.
	vlan-id	Ranges from 1 to 4094.
	trunk	Specifies VLAN type: Trunk. Connects another 802.1Q VLAN aware switch.
	fixed vlan	Specifies other VLAN ID for tagged devices that connect to the port.
	vlan-ids	Ranges from 1 to 4094. Use commas to separate different VLAN IDs.
	add	Specifies to add tagged VLAN.

	remove	Specifies to remove tagged VLAN.
	tag	Specifies tagged VLAN IDs
	untag	Specifies untagged VLAN IDs
	native vlan	Specifies the default VLAN ID for untagged devices that connect to the port
	hybrid	Specifies VLAN type: Hybrid. Connects another Access 802.1Q VLAN aware switch or another LAN that combines tagged and/or untagged devices and/or other switches/hubs.
Defaults	• Default native vlan is 1. • Default access vlan is 1.	
Command Modes	Global configuration, sub-level configuration	
Usage Guidelines	• Member ports existing in the specified trunked port is required before entering sub-level configuration mode of this command. • Make sure the VLAN ID is created in advance before using it.	

Examples	• For Trunk-group 2, change port type from "Access" to "Trunk" and return access VLAN ID to default value 1.
	`router# configure`
	`router(config)# interface trunk 2`
	`router(config-if)# no switchport trunk native vlan`
	`router(config-if)# exit`
	`router(config)# exit`
	
	• For Trunk-group 2, add a tagged VLAN 5 when trunk type is specified.
	`router# configure`
	`router(config)# interface trunk 2`
	`router(config-if)# switchport trunk fixed vlan add 5`
	`router(config-if)# exit`
	`router(config)# exit`
	
	• For Trunk-group 2, remove all tagged VLAN when trunk type is specified.
	`router# configure`
	`router(config)# interface trunk 2`
	`router(config-if)# no switchport trunk fixed vlan`
	`router(config-if)# exit`
	`router(config)# exit`	

Error Messages	% VLAN id is out of range!	
	vlan id does not exist!!	
	^Parse error	
	^Incomplete command	
Related Commands	interface ethernet show interfaces trunk	

show interfaces trunk

To check the status of the trunk ports, use the **show interfaces trunk** command.

Synopsis

show interfaces trunk [<trunk-id> [**counters**]]

Option Description	trunk-id	ID or a common separated ID list of the trunk port
	counters	Displays packet counters including TX, RX for the specified trunk port
Defaults	N/A	
Command Modes	Privileged EXEC / User EXEC	
Usage Guidelines	N/A	

Examples	• Display overall trunk port settings.
	`router# show interfaces trunk`
	`Trk#  Type  Enable Description  Speed`
	`---- ------ ------ ---------- ---------`
	`1    Static Yes  1G-Full`
	
	• Display status for trunk port 1.
	`router# show interfaces trunk 1`
	
	`Trunk-1`
	`  Name :`
	`  Type : Static`
	`  Member  Status`
	`  ------ ----------`
	`  1/7  Success`
	`  1/8  Fail`
	
	• Display packet counter information for trunk port 1.
	`router# show interfaces trunk 1 counters`
	`Trk1 (last sample time: 605221 secs ago)`
	`  - TX -`
	`  Unicast Packets  : 5733  +5733`
	`  Multicast Packets  : 1331  +1331`
	`  Broadcast Packets  : 102  +102`
	• `  Collision Packets  : 0  +0`
	`  - RX -`
	`  Unicast Packets  : 6756  +6756`
	`  Multicast Packets  : 81  +81`
	`  Broadcast Packets  : 54  +54`
	`  Pause Packets  : 0  +0`
	`  - Error -`
	`  TX Late  : 0  +0`
	`  TX Excessive  : 0  +0`
	`  RX CRC error  : 0  +0`
	`  RX Discard  : 0  +0`
	`  RX Undersize  : 0  +0`
	`  RX Fragments  : 0  +0`
	`  RX Oversize  : 0  +0`
	`  RX Jabber  : 0  +0`	

Error Messages	^Parse error	
	^Incomplete command	
Related Commands	interface trunk name interface trunk switchport interface ethernet trunk-group	

PoE

poe system

Use the **poe system** global configuration commands on the router for configuring PoE related settings. Use the **no** form of this command to disable PoE settings.

Synopsis

(config)# **poe system** {**enable** |
power-budget budget <value> |
threshold {**power** <value> |
cutoff}}

(config)# **no poe system** [**threshold** {**power** | **cutoff**}]

Option Description	enable	Specifies to enable PoE power output
	power-budget budget	Specifies PoE power budget if applicable.
	threshold	Specifies the threshold of power budget
	power	Specifies a power threshold
	value	Integer (Watt)
	cutoff	Specifies to enable/disable Auto Power Cutting
Defaults	N/A	
Command Modes	Global configuration	
Usage Guidelines	• To proceed with threshold or cutoff settings, it's necessary to have PoE power output enabled beforehand. • When Auto Power Cutting is disabled, the router will calculate power budget based on the Power Allocation settings of all ports. • Adjustability of the PoE power budget varies across different models.	

Examples	Enable Auto Power Cutting and set power threshold to 50 watts:
	`router# configure`
	`router(config)# poe system enable`
	`router(config)# poe system threshold cutoff`
	`router(config)# poe system threshold power 50`
	`router(config)# exit`	

Error Messages	% Power threshold should be between 30 and 95.	
	% System power budget should be between 95 and 95.	
	^Parse error	
	^Incomplete command	
Related Commands	poe scheduling interface ethernet poe show poe	

poe scheduling

Use the **poe scheduling** global configuration commands on the router for scheduling availability of PoE for each PoE port. Use the **no** form of this command to disable PoE settings.

Synopsis

(config)# **poe scheduling** <rule-name> {<year> <month> <day> <start-hour> <start-min> <end-hour> <end-min> |
activate |
repeat <schedule-day>}

(config)# **no poe scheduling** {<rule-name> |
activate |
repeat <schedule-day>}

Option Description	rule-name	Specifies a name for the scheduling rule. Max. length is 63.
	year	Specifies start date (year)
	month	Specifies start date (month), ranges from 1 to 12.
	day	Specifies start date (day), ranges from 1 to 31.
	start-hour	Specifies start hour, ranges from 0 to 23.
	start-min	Specifies start minute, ranges from 0 to 59.
	end-hour	Specifies end hour, ranges from 0 to 23.
	end-min	Specifies end minute, ranges from 0 to 59.
	activate	Specifies to enable / disable the rule
	repeat	Specifies to repeat execution of the rule on a daily or weekly basis.
	schedule-day	Specifies one of below strings for scheduled day: { daily | weekday | weekend | sunday | monday | tuesday | wednesday | thursday | friday | Saturday } For multiple days, execute this command multiple times.
Defaults	N/A	
Command Modes	Global configuration	
Usage Guidelines	To proceed with scheduling settings, it's necessary to have PoE power output enabled beforehand.	

Examples	• Create a rule-example to schedule 8 a.m. to 6 p.m. on weekdays:
	`router# configure`
	`router(config)# poe scheduling rule-example 2023 8 10 8 0 18 0`
	`router(config)# poe scheduling rule-example repeat weekday`
	`router(config)# poe scheduling rule-example activate`
	`router(config)# exit`
	• Delete the rule "rule-example":
	`router# configure`
	`router(config)# no poe scheduling rule-example`
	`router(config)# exit`	

Error Messages	% The rule name is too long (max. 63).	
	% The year of start date should begin since 1900.	
	% The month of start date should be between 1 and 12.	
	% The day of start date should be between 1 and 31.	
	% The hour of start time should be between 0 and 23.	
	% The minute of start time should be between 0 and 59.	
	% The hour of end time should be between 0 and 23.	
	% The minute of end time should be between 0 and 59.	
	% Invalid rule name.	
	% Invalid repeat day.	
	% Schedule is conflict.	
	^Parse error	
	^Incomplete command	
Related Commands	poe system interface ethernet poe show poe	

show poe

To check the PoE port status on the router, use the **show poe** command.

Synopsis

show poe

Option Description	poe	Display PoE port status
Defaults	N/A	
Command Modes	Privileged EXEC / User EXEC	
Usage Guidelines	Output only available on PoE models.	
Examples	router# show poe PoE system status: PoE power output : Enable PoE power budget : 95 Watts PoE power threshold : 95 Watts PoE threahold cutoff : Cutoff Sum of allocated power : 16 Watts Sum of measured power : 4 Watts PSE input voltage (VEE): 54 Volts +----------+ |Power Consumption Voltage Current PD Failure PD Status | |Port Status Output Class (W) (V) (mA) Check Description| +---- ------- ------ ------ ---------- ------- ------- ----------+ 1 Enable Off N/A N/A N/A N/A Disable NIC 2 Enable Off N/A N/A N/A N/A Disable NIC 3 Enable Off N/A N/A N/A N/A Disable NIC 4 Enable On 0 4 55 58 Disable Powered 5 Enable Off N/A N/A N/A N/A Disable Not Present 6 Enable Off N/A N/A N/A N/A Disable Not Present 7 Enable Off N/A N/A N/A N/A Disable Not Present 8 Enable Off N/A N/A N/A N/A Disable NIC G3 Enable Off N/A N/A N/A N/A Disable Not Present G4 Enable Off N/A N/A N/A N/A Disable Not Present G7 Enable Off N/A N/A N/A N/A Disable Not Present G8 Enable Off N/A N/A N/A N/A Disable Not Present	
Error Messages	% Not support POE on this switch	
	^Parse error	
	^Incomplete command	
Related Commands	N/A	

Network Redundancy

Layer 2 Redundant Protocols

redundancy mode

Use the **redundancy mode** global configuration command on the switch to change the redundancy protocol mode.

Synopsis

(config)# **redundancy mode** {**rstp** |
turbo-ring-v2}

Option Description	mode	Specify the redundancy protocol
	rstp	Rapid Spanning Tree
	turbo-ring-v2	Turbo ring version 2
Defaults	The default redundancy protocol mode is RSTP.	
Command Modes	Global configuration	
Usage Guidelines	N/A	
Examples	* An illustrative example can be found in the command "**redundancy spanning-tree**" and "**redundancy turbo-ring-v2**".	
Error Messages	^Parse error	
	^Incomplete command	
Related Commands	show redundancy mode	

show redundancy mode

To check the redundancy mode on the router, use the **show redundancy mode** command.

Synopsis

show redundancy mode

Option Description	redundancy	Display redundancy protocol status
	mode	Display Turbo Ring v2 / RSTP mode
Defaults	N/A	
Command Modes	Privileged EXEC / User EXEC	
Usage Guidelines	N/A	
Examples	`router# show redundancy mode` `  Current redundancy mode  : Turbo Ring V2`	
Error Messages	^Parse error	
	^Incomplete command	
Related Commands	redundancy mode	

RSTP

redundancy spanning-tree

To specify or modify redundant protocols (RSTP) on the router, use the **redundancy spanning-tree** global configuration command and related sub-level configuration command sets. To return RSTP to default settings, use the **no** form of this command.

Synopsis

(config)# **redundancy**
(config-rdnt)# {**exit** |
spanning-tree {**priority** <prio> |
hello-time <hello-second> |
forward-delay <delay-second> |
max-age <age-second>}}

(config-rdnt)# **no spanning-tree** {**priority** |
hello-time |
forward-delay |
max-age}

Option Description	exit	Commit new settings and exit sub-level configuration mode
	spanning-tree	Specifies spanning-tree settings
	priority	Specifies this device's bridge priority
	prio	Ranges from 0 to 61440, and must be the multiples of 4096
	hello-time	Specifies Hello time
	hello-second	Ranges from 1 to 2 seconds
	forward-delay	Specifies the amount of time this device waits before checking to see if it should change to a different state.
	delay-second	Ranges from 4 to 30 seconds
	max-age	Specifies spanning tree max age
	age-second	Ranges from 6 to 40 seconds
Defaults	N/A	
Command Modes	Global configuration, sub-level configuration	
Usage Guidelines	• 2*(hello-time + 1.0 sec) <= max-age <= 2*(forward-delay - 1.0 sec) • Enable spanning-tree feature in the command "**interface ethernet**" to let RSTP take effect.	
Examples	Specify RSTP on two routers: Prerequisites: • TN router A: - P5: VLAN ID=10 - RSTP ports: P7 and P8 • TN router B: - P5: VLAN ID=10 - RSTP ports: P7 and P8 • PC-1: - IP: 10.10.10.19/24 • PC-2 : - IP: 10.10.10.127/24	

Network topology:

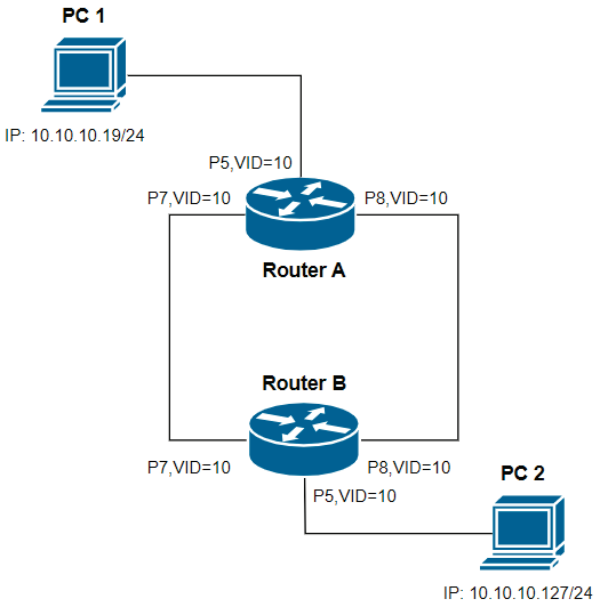

Scenario:

a) Router (A) and Router (B) enable RSTP to provide redundancy for communication. Router (B) could be other brand which does not support Moxa proprietary Turbo Ring V2 redundancy protocol.

b) PC (1) and PC (2) can communicate with each other via Router (A) and Router (B).

c) This feature provides a functionality of network redundancy.

Commands:

On Router A:

```
router(config)# redundancy mode rstp
router(config)# redundancy
router(config-rdnt)# spanning-tree priority 32768
router(config-rdnt)# spanning-tree forward-delay 15
router(config-rdnt)# spanning-tree max-age 20
router(config-rdnt)# spanning-tree hello-time 2
router(config-rdnt)# exit
router(config)# interface ethernet 1/7
router(config-if)# no shutdown
router(config-if)# speed-duplex Auto
router(config-if)# no flowcontrol
router(config-if)# media cable-mode auto
router(config-if)# switchport access vlan  10
router(config-if)# spanning-tree
router(config-if)# exit
router(config)# interface ethernet 1/8
router(config-if)# no shutdown
router(config-if)# speed-duplex Auto
router(config-if)# no flowcontrol
router(config-if)# media cable-mode auto
router(config-if)# switchport access vlan  10
router(config-if)# spanning-tree
router(config-if)# exit
```

Error Messages	
	The BPDU forward delay time must be in the range from 4 to 30 secs
	The formula must be obeyed: 2 x (Hello Time + 1 sec) <= Max age <= 2 x (Forward Delay - 1 sec)
	BPDU hello time must be in the range from 1 to 2 secs
	The bridge priority must be in the range from 0 to 61440

	The bridge priority must be the multiples of 4096
	^Parse error
	^Incomplete command
Related Commands	spanning-tree forward-delay spanning-tree max-age show redundancy spanning-tree

interface ethernet spanning-tree

To specify or modify RSTP function, use the **interface ethernet** global configuration command and **spanning-tree** sub-level configuration command set. To return to default settings, use the **no** form of this command.

Synopsis

(config)# **interface ethernet** <mod-port>
(config-if)# **spanning-tree** [{**edge-port** |
priority <pri-value>|
cost <cost-value>}]

(config-if)# **no spanning-tree** [{**edge-port** |
priority |
cost }]

Option Description	mod-port	Port ID (consists of module/port-number) or list. E.g. 1/1,2,3,2/1-3,5,...
	spanning-tree	Enables spanning tree function
	edge-port	Configures as edge port.
	priority	Specifies port priority
	pri-value	Ranges from 0 to 240, and must be multiples of 16
	cost	Specifies port cost
	cost-value	Ranges from 1 to 200000000.
Defaults	N/A	
Command Modes	Global configuration, sub-level configuration	
Usage Guidelines	N/A.	
Examples	* An illustrative example can be found in the command "**redundancy spanning-tree**".	
Error Messages	% Illegal parameter	
	% Cost value must be in the range 1 ~ 200000000	
	% Priority value must be multiples of 16 and not exceed 240	
	^Parse error	
	^Incomplete command	
Related Commands	show redundancy spanning-tree	

show redundancy spanning-tree

Use the **show redundancy spanning-tree** user EXEC command to display the spanning-tree state information.

Synopsis

show redundancy spanning-tree

Option Description	redundancy	Display redundancy protocol status
	spanning-tree	Display spanning tree settings
Defaults	N/A	
Command Modes	Privileged EXEC / User EXEC	
Usage Guidelines	N/A	

Examples	`router# show redundant spanning-tree`
	
	`Spanning tree status : Enabled`
	`Role : Root`
	`Bridge priority : 32768`
	`Hello time : 2 sec`
	`Forwarding delay : 30 sec`
	`Max age time : 20 sec`
	
	`Int# Enable Edge Port Prio Cost Status`
	`1/1 Disabled Auto 128 200000 ---`
	`1/2 Disabled Auto 128 200000 ---`
	`1/3 Disabled Auto 128 200000 ---`
	`1/4 Disabled Auto 128 200000 ---`
	`1/5 Disabled Auto 128 200000 ---`
	`1/6 Disabled Auto 128 200000 ---`
	`1/7 Enabled False 128 200000 Forwarding`
	`1/8 Enabled False 128 200000 Link Down`	

Error messages	^Parse error	
	^Incomplete command	
Related Commands	spanning-tree forward-delay spanning-tree hello-time spanning-tree max-age spanning-tree priority spanning-tree spanning-tree cost spanning-tree edge-port spanning-tree priority	

Turbo Ring V2

redundancy turbo-ring-v2

To specify or modify redundant protocol (Turbo Ring V2) on the router, use the **redundancy turbo-ring-v2** global configuration command and related sub-level configuration command sets. To disable Turbo Ring V2, use the **no** form of this command.

Synopsis

(config)# **redundancy**
(config-rdnt)# {**exit** |
turbo-ring-v2 {<ring-id> {**master** |
primary interface <pri-if> **secondary interface** <sec-if>} |
coupling {**dual-homing primary interface** <pri-if> **backup interface** <sec-if> |
backup interface <sec-if> |
primary interface <pri-if>}}

(config-rdnt)# **no turbo-ring-v2** {<ring-id> [**master**] |
coupling}

Option Description	exit	Commit new settings and exit sub-level configuration mode
	turbo-ring-v2	Specifies Turbo Ring V2 settings
	ring-id	Ring ID. Only 1 or 2 is allowed to specify Ring 1 or Ring 2.
	master	Specifies the router as the master of the Ring.
	primary interface	Specifies first redundant port
	pri-if	Port ID (consists of module/port-number). E.g. 1/1, 1/5
	secondary interface	Specifies second redundant port
	sec-if	Port ID (consists of module/port-number). E.g. 1/1, 1/5
	coupling	Specifies the router as Coupler
	dual-homing	Specifies Dual-homing mode
	primary interface	Specifies the primary port
	backup interface	Specifies the backup port
Defaults	N/A	
Command Modes	Global configuration, sub-level configuration	
Usage Guidelines	At least enable one turbo-ring domain or coupling. But cannot enable two turbo-ring domains and coupling at the same time.	
Examples	Specify Turbo Ring v2 on two routers: Prerequisites: • TN router A: - P5: VLAN ID=10 - P7: VLAN ID=10, 1st redundant port - P8: VLAN ID=10, 2nd redundant port - Ring 1 is enabled. • TN router B: - P5: VLAN ID=10 - P7: VLAN ID=10, 1st redundant port - P8: VLAN ID=10, 2nd redundant port - Ring 1 is enabled. • PC-1: - IP: 10.10.10.19/24 • PC-2 : - IP: 10.10.10.127/24	

Network topology:

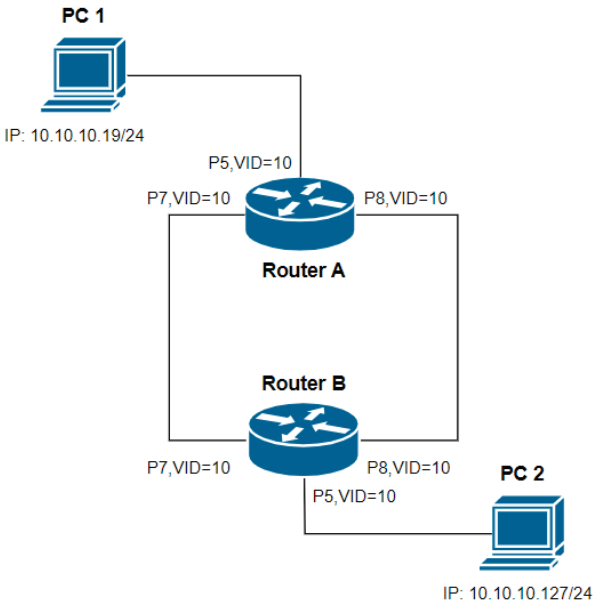

Scenario:

a) Router (A) and Router (B) both enable Moxa Turbo Ring v2 to provide redundancy for communication.
b) PC (1) and PC (2) can communicate with each other via Router (A) and Router (B).
c) This feature provides a network redundancy to achieve a fast recovery time when the primary path is disconnected.

Commands:

On Router A:

```
router(config)# redundancy mode turbo-ring-v2
router(config)# redundancy
router(config-rdnt)# turbo-ring-v2  1 primary interface 1/7 secondary
interface 1/8
router(config-rdnt)# no turbo-ring-v2  1 master
router(config-rdnt)# no turbo-ring-v2  2 master
router(config-rdnt)# no turbo-ring-v2  2
router(config-rdnt)# no turbo-ring-v2 coupling
router(config-rdnt)# exit
```

On Router B:

```
router(config)# redundancy mode turbo-ring-v2
router(config)# redundancy
router(config-rdnt)# turbo-ring-v2  1 primary interface 1/7 secondary
interface 1/8
router(config-rdnt)# no turbo-ring-v2  1 master
router(config-rdnt)# no turbo-ring-v2  2 master
router(config-rdnt)# no turbo-ring-v2  2
router(config-rdnt)# no turbo-ring-v2 coupling
router(config-rdnt)# exit
```

Error Messages	
	Turbo ring v2 only supports maximum 2 ring domains
	Ring1: One port couldn't be set as 1st and 2nd redundant port simultaneously!!!
	Ring2: One port couldn't be set as Ring1 redundant port simultaneously!!!
	Coupling: One port couldn't be set as 1st and 2nd redundant port simultaneously!!!
	Primary port couldn't be set as Ring2 redundant port simultaneously!!!
	Backup port couldn't be set as Ring2 redundant port simultaneously!!!
	Coupling port couldn't be set as Ring2 redundant port simultaneously!!!
	Please select at least one Ring!!!

	Ring1, ring2, coupling couldn't be enabled simultaneously!!!
	Please enable one Ring in "Ring Coupling" mode!!!
	^Parse error
	^Incomplete command
Related Commands	show turbo-ring-v2

show redundancy turbo-ring-v2

Use the **show spanning-tree turbo-ring-v2** user EXEC command to display Turbo Ring v2 configuration and state information.

Synopsis

show redundancy turbo-ring-v2

Option Description	redundancy	Display redundancy protocol status
	turbo-ring-v2	Display turbo ring v2 status
Defaults	N/A	
Command Modes	Privileged EXEC / User EXEC	
Usage Guidelines	N/A	

Examples	`router# show redundancy turbo-ring-v2`
	`Turbo Ring V2 settings:`
	`  Ring 1: Enabled`
	`  Set as master:  Disabled`
	`  1st port:  7`
	`  2nd port:  8`
	`  Ring 2: Disabled`
	`  Set as master:  Disabled`
	`  1st port:  5`
	`  2nd port:  6`
	`  Ring Coupling:  Disabled`
	`  Primary Port:3`
	`  Backup Port:4`
	
	`Turbo Ring V2 status:`
	`  Ring 1:`
	`  Status:Healthy`
	`  Master/Slave:Slave`
	`  1st Ring Port Status:7 Forwarding`
	`  2nd Ring Port Status:8 Forwarding`
	`  Ring 2:`
	`  Status:---`
	`  Master/Slave:---`
	`  1st Ring Port Status:---`
	`  2nd Ring Port Status:---`
	`  Coupling:`
	`  Mode:---`
	`  Coupling Port Status: ---`	

Error Messages	^Parse error	
	^Incomplete command	
Related Commands	redundancy turbo-ring-v2	

Virtual LAN

Create/Remove VLAN ports

vlan create

To create VLAN IDs on the router, use the **vlan create** global configuration command. To remove the VLAN IDs, use the **no** form of this command.

Synopsis

(config)# **vlan create** <string-vlan-ids>

(config)# **no vlan create** <string-vlan-ids>

Option Description	string-vlan-ids	A VLAN ID or a list of VLAN IDs separated by comma.
Defaults	N/A	
Command Modes	Global configuration	
Usage Guidelines	VLAN ID ranges from 1 to 4094.	

Examples	Specify VLAN ID 55:
	`router# configure`
	`router(config)# vlan create 55`
	`router(config)# exit`	

Error Messages	% vlan is invalid!! Should be range from 1 to 4094	
	^Parse error	
	^Incomplete command	
Related Commands	show vlan interface vlan	

show vlan

Use the **show vlan** user EXEC command to display VLAN status information.

Synopsis

show vlan

Option Description	vlan	Display VLAN status
Defaults	N/A	
Command Modes	Privileged EXEC / User EXEC	
Usage Guidelines	N/A	

Examples	`router# show vlan`
	`vlan mode: 802.1Q vlan`
	`mgmt vlan: 1`
	
	`VLAN 1:`
	`  Access Ports: 1/1, 1/2, 1/3, 1/4, 1/6, 1/9, 1/10, 1/11,`
	`  1/12, 1/13, 1/14, 1/15, 1/16,`
	`  Trunk Ports:`
	`  Hybrid Ports:`
	`  Bridge Ports:`
	`VLAN 10:`
	`  Access Ports: 1/5, 1/7, 1/8,`
	`  Trunk Ports:`
	`  Hybrid Ports:`
	`  Bridge Ports:`
	`VLAN 55:`
	`  Access Ports:`
	`  Trunk Ports:`
	`  Hybrid Ports:`
	`  Bridge Ports:`	

Error Messages	^Parse error	
	^Incomplete command	
Related Commands	vlan create show vlan config	

show vlan config

Use the **show vlan** user EXEC command to display VLAN configuration information.

Synopsis

show vlan config

Option Description	vlan	Display VLAN status
	config	Display VLAN configuration
Defaults	N/A	
Command Modes	Privileged EXEC / User EXEC	
Usage Guidelines	N/A	

Examples	`router# show vlan config`
	`vlan mode: 802.1Q vlan`
	`VLAN  Ports(Type)`
	`----- ------------------------------`
	`1     1/1(A), 1/2(A), 1/3(A), 1/4(A), 1/6(A), 1/9(A), 1/10(A),`
	`      1/11(A), 1/12(A), 1/13(A), 1/14(A), 1/15(A), 1/16(A),`
	`10    1/5(A), 1/7(A), 1/8(A),`
	`==================================================`
	`Port    Trunk Native vlan`
	
	`Port    Fixed VLAN  (Tagged)`
	
	`Port    Fixed VLAN  (Untagged)`
	
	`Current VLAN interface vid:`
	`        1, 10, 55,`	

Error Messages	^Parse error	
	^Incomplete command	
Related Commands	interface ethernet switchport vlan create show vlan	

Multicast

IGMP Snooping

ip igmp-snooping

Use the **ip igmp-snooping** global configuration command on the switch to globally enable Internet Group Management Protocol (IGMP) snooping on the switch. Use the command with keywords to enable IGMP snooping. Use the **no** form of this command to disable IGMP snooping.

Synopsis

(config)# **ip igmp-snooping** {**vlan** <vlan-id> [mrouter <mod-port>] |
querier vlan <vlan-id> [**v3**] |
query-interval <seconds>}

(config)# **no ip igmp-snooping** [{**vlan** <vlan-id> |
querier vlan <vlan-id>}]

Option Description	vlan	Specifies VLAN parameters and enables IGMP Snooping
	vlan-id	Ranges from 1 to 4094
	mrouter	Specifies the Port ID that will connect to the multicast routers. Note that IGMP snooping vlan <vlan-id> needs to be specified in advance.
	mod-port	Port ID (consists of module/port-number) or list. E.g. 1/1,2,3,2/1-3,5,...
	querier vlan	Specifies IGMP snooping query enable
	v3	Specifies IGMPv3 mode
	query-interval	Specifies IGMP snooping query interval
	seconds	Ranges from 20 to 600 seconds
Defaults	IGMP snooping is globally disabled.	
Command Modes	Global configuration	
Usage Guidelines	• IGMP snooping function will be enabled automatically as soon as the first VLAN is configured. • Use **ip igmp-snooping querier vlan** <vlan-id> **v3** can make the switch to send IGMP V3 query, otherwise the default is V2 query. • Make sure the VLAN ID is created in advance before using it.	

Examples	Enable IGMP snooping on VLAN ID(1) and enable querier function (V3). Then specify static multicast querier port on PORT1 and PORT3 :
	`router# configure`
	`router(config)# ip igmp-snooping vlan 1`
	`router(config)# ip igmp-snooping querier vlan 1 v3`
	`router(config)# ip igmp-snooping vlan 1 mrouter 1/1,1/3,`
	`router(config)# exit`	

Error Messages	% Please check the multicast mac address's type !!!	
	% Vlan IGMP Function is Disabled !!!	
	% Vlan entry not found!!!	
	^Parse error	
	^Incomplete command	
Related Commands	show ip igmp config	

show ip igmp

Use the **show ip igmp** user EXEC command to display the Internet Group Management Protocol (IGMP) snooping configuration and the IGMP table of the switch.

Synopsis

show ip igmp [{**group** <grp-addr> [**source** <src-addr>] |
config}]

Option Description	group	Show IGMP table by specified group address
	grp-addr	Multicast group IP address
	source	Show IGMP table by specified group address and source address
	src-addr	Multicast source IP address
	config	Show IGMP snooping settings
Defaults	N/A	
Command Modes	Privileged EXEC / User EXEC	
Usage Guidelines	router# show ip igmp config IGMP Snooping :Enable Query Interval :125(sec) VID | Static(S) Multicast Querier | Enable Querier --- 1 1, 3, Enable(V3)	
Examples	N/A	
Error Messages	^Parse error	
	^Incomplete command	
Related Commands	ip igmp-snooping	

Static Multicast MAC

ip igmp static-group

Use the **ip igmp static-group** global configuration command on the switch to add a static multicast MAC address and its member ports. Use the **no** form of this command to remove the static multicast group or its member ports.

Synopsis

(config)# **ip igmp static-group** <mac-address> **interface** <module-port>

(config)# **no ip igmp static-group** [mac-address [**interface** <module-port>]]

Option	static-group	Specifies static multicast MAC address
Description	mac-address	MAC address XX:XX:XX:XX:XX:XX
	interface	Specifies binding ports
	module-port	Port (Trunk) ID or list. Ex. 1/1,2,4-5,2/1,Trk1,Trk2-Trk
Defaults	N/A	
Command Modes	Global configuration	
Usage Guidelines	N/A	
Examples	`router(config)# ip igmp static-group 01:00:5E:01:01:08 interface 1/8` `router(config)# no ip igmp static-group`	
Error Messages	Add new static multicast MAC address Fail!!! Please check the multicast mac address's type!!!	
	Add new static multicast MAC address Fail!!! Not enough space to add a new static multicast MAC address!!!	
	The member port should not be GMRP-enabled port!!!	
	^Parse error	
	^Incomplete command	
Related Commands	show mac-address-table mcast show ip igmp config	

QoS and Rate Control

QoS Classification

qos mode

Use the **qos mode** global configuration command on the switch to configure the current QoS strategy. Use **no** form of this command to return to the default.

Synopsis

(config)# **qos mode** {**weighted-fair** | **strict**}

(config)# **no qos mode**

Option Description	mode	Configure queuing mechanism
	weighted-fair	Weighted fair queuing
	strict	Strict queuing
Defaults	Default QoS strategy is Weighted-fair queuing.	
Command Modes	Global configuration	
Usage Guidelines	N/A	

Examples	Specify QoS mode to "strict" :
	`router# configure`
	`router(config)# qos mode strict`
	`router(config)# exit`	

Error Messages	^Parse error	
	^Incomplete command	
Related Commands	show qos	

qos mapping

Use the **qos mapping** global configuration command on the switch to configure the CoS and DSCP mappings. Use **no** form of this command to return to the default value.

Synopsis

(config)# **qos mapping** {**cos-to-queue** <cos-value> <queue> |
dscp-to-queue <dscp-value> <queue>}

(config)# **no qos mapping** {**dscp-to-queue** |
cos-to-queue}

Option Description	cos-to-queue	CoS to traffic queue
	cos-value	CoS value (0~7)
	queue	Traffic queue (port priority). Ranges from 0(Low) to 3(High)
	dscp-to-queue	DSCP to traffic queue
	dscp-value	DSCP value (0~63)
Defaults	Cos (queue) : 0 (0), 1(0), 2(1), 3(1), 4(2), 5(2), 6(3), 7(3) DSCP(Cos) : 0-15(0), 16-31(1), 32-47(2), 48-63(3	
Command Modes	Global configuration	
Usage Guidelines	N/A	

Examples	Specify CoS (1) to queue Normal (1):
	`router# configure`
	`router(config)# qos mapping cos-to-queue 1 1`
	`router(config)# exit`	

Error Messages	% Invalid parameter. CoS value must be 0~7 and queue number must be 0~3	
	% Invalid parameter. DSCP value must be 0~63 and queue value must be 0~3	
	^Parse error	
	^Incomplete command	
Related Commands	show qos	

interface trunk qos

To specify or modify QoS settings to a trunked port, use the **interface trunk** global configuration command and **qos** sub-level configuration command sets. To return to the default QoS setting to the trunked port, use the **no** form of this command.

Synopsis

(config)# **interface trunk** <trunk-id>
(config-if)# **qos** {**inspect** {**cos** |
dscp}|
default-cos <cos-value>}

(config-if)# **no qos** {**inspect** {**cos** |
dscp}|
default-cos}

Option Description	trunk-id	Trunk group ID. Maximum number of trunk groups differs among different models.
	qos	Specifies QoS settings
	inspect	Specifies cos/dscp inspection
	cos	Enables "inspect CoS"
	dscp	Enables "inspect ToS"
	default-cos	Specifies default CoS value
	cos-value	Ranges from 0 to 7
Defaults	CoS is enabled; DSCP is enabled.	
Command Modes	Global configuration, sub-level configuration	
Usage Guidelines	• Member ports existing in the specified trunked port is required before entering sub-level configuration mode of this command • The priority of an ingress frame is determined in the following order: 1. CoS 2. DSCP 3. Port priority	

Examples	Disable CoS on trk1 and change port priority to 7(High):
	`router# configure`
	`router(config)# interface trunk 1`
	`router(config-if)# no qos inspect cos`
	`router(config-if)# qos default-cos 7`
	`router(config-if)# exit`	

Error Messages	% CoS value is out of range! The allowed value range is 0 to 7	
	^Parse error	
	^Incomplete command	
Related Commands	show qos	

interface ethernet qos

To specify or modify QoS settings to an Ethernet port, use the **interface ethernet** global configuration command and **qos** sub-level configuration command sets. To return to the default QoS setting to the Ethernet port, use the **no** form of this command.

Synopsis

(config)# **interface ethernet** <mod-port>
(config-if)# **qos** {**inspect** {**cos** |
dscp} |
default-cos <cos-value>}

(config-if)# **no qos** {**inspect** {**cos** |
dscp}|
default-cos}

Option Description	mod-port	Port ID (consists of module/port-number) or list. E.g. 1/1,2,3,2/1-3,5,…
	qos	Specifies QoS settings
	inspect	Specifies cos/dscp inspection
	cos	Enables "inspect CoS"
	dscp	Enables "inspect ToS"
	default-cos	Specifies default CoS value
	cos-value	Ranges from 0 to 7
Defaults	CoS is enabled; DSCP is enabled.	
Command Modes	Global configuration, sub-level configuration	
Usage Guidelines	The priority of an ingress frame is determined in the following order: 1. CoS 2. DSCP 3. Port priority	

Examples	Disable CoS on Ethernet PORT1 and change port priority to 7(High):
	`router# configure`
	`router(config)# interface ethernet 1/1`
	`router(config-if)# no qos inspect cos`
	`router(config-if)# qos default-cos 7`
	`router(config-if)# exit`	

Error Messages	% CoS value is out of range! The allowed value range is 0 to 7	
	^Parse error	
	^Incomplete command	
Related Commands	show qos	

show qos

Use the **show qos** user EXEC command to display QoS related settings.

Synopsis

show qos [{**cos-to-queue** | **dscp-to-queue**}]

Option Description	qos	Display QoS configuration
	cos-to-queue	CoS to traffic queue mappings
	dscp-to-queue	DSCP to traffic queue mappings
Defaults	N/A	
Command Modes	Privileged EXEC / User EXEC	
Usage Guidelines	N/A	
Examples	router# show qos Queuing Mechanism : Weighted Fair (1:2:4:8) Int# CoS Inspection ToS Inspection CoS ---- -------------- -------------- --- 1/1 Disabled Enabled 7 1/2 Enabled Enabled 3 1/3 Enabled Enabled 3 1/4 Enabled Enabled 3 1/5 Enabled Enabled 3 1/6 Enabled Enabled 3 Trk1 Disabled Enabled 7	
Error Messages	^Parse error	
	^Incomplete command	
Related Commands	qos mode qos mapping interface trunk qos interface ethernet qos	

Rate Limiting

interface ethernet rate-limit

To specify or modify a rate limiting percentage, use the **interface ethernet** global configuration command and related sub-level configuration command sets. To return to the default settings, use the **no** form of this command.

Synopsis

(config)# **interface ethernet** <mod-port>
(config-if)# **rate-limit normal** {**ingress percentage** | **egress percentage**} <number>

(config-if)# **no rate-limit normal** {**ingress percentage** |
egress percentage}

Option Description	mod-port	Port ID (consists of module/port-number) or list. E.g. 1/1,2,3,2/1-3,5,...
	normal	Specifies ingress/egress percentage.
	ingress percentage	Specifies ingress percentage
	egress percentage	Specifies egress percentage
	number	Specifies an integer for: {Not limited(0) | 3%(3) | 5%(5) | 10%(10) | 15%(15) | 25%(25) | 35%(35) | 50%(50) | 65%(65) | 85%(85)}
Defaults	Not limited	
Command Modes	Global configuration, sub-level configuration	
Usage Guidelines	N/A.	

Examples	Specify 50% rate limit of egress on PORT3:
	`router# configure`
	`router(config)# interface ethernet 1/3`
	`router(config-if)# rate-limit normal egress percentage 50`
	`router(config-if)# exit`	

Error Messages	% Illegal parameter	
	^Parse error	
	^Incomplete command	
Related Commands	rate-limit ingress	

rate-limit ingress

Use the **rate-limit ingress** configuration command on the router to configure the ingress policy.

Synopsis

(config)# **rate-limit ingress mode** {**bcast** |
bcast-mcast |
bcast-mcast-dlf |
all}

Option Description	ingress	Specifies ingress rate limiting
	mode	Specifies the mode
	bcast	Limit broadcast frames
	bcast-mcast	Limit broadcast and multicast frames
	bcast-mcast-dlf	Limit broadcast, multicast and flooded unicast which is also known as DLF (destination lookup failure) frames
	all	All traffic
Defaults	Limit broadcast frames	
Command Modes	Global configuration	
Usage Guidelines	N/A	

Examples	Specify rate limit ingress policy to bcast-mcast:
	`router# configure`
	`router(config)# rate-limit ingress mode bcast-mcast`
	`router(config)# exit`	

Error Messages	^Parse error	
	^Incomplete command	
Related Commands	interface ethernet rate-limit	

MAC Address Table

mac-address-table aging-time

To specify or modify the aging time of the MAC address table, use the **mac-address-table aging-time** global configuration command. To return to the default, use the **no** form of this command.

Synopsis

(config)# **mac-address-table aging-time** <second>

(config)# **no mac-address-table aging-time**

Option Description	second	Ranges from 5 to 300 seconds.
Defaults	300	
Command Modes	Global configuration	
Usage Guidelines	N/A	

Examples	Specify the aging-time to 200 seconds:
	`router# configure`
	`router(config)# mac-address-table aging-time 200`
	`router(config)# exit`	

Error Messages	% Age time should between 5~300s!	
	^Parse error	
	^Incomplete command	
Related Commands	show mac-address-table	

show mac-address-table

Use the **show mac-address-table** user EXEC command to display the MAC addresses in the MAC address table.

Synopsis

show mac-address-table [{**static** |
learned |
mcast |
aging-time}]

show mac-address-table interface {**ethernet** <mod-port> |
trunk <trunk-id>}

Option Description	mac-address-table	Display MAC address forwarding table
	static	Retrieve static MAC addresses
	learned	Retrieve learned MAC addresses
	mcast	Retrieve Multicast address
	aging-time	MAC entry aging time
	interface	Retrieve MAC address by interface
	ethernet	Ethernet Port interface
	mod-port	Port ID. Ex. 1/3, 2/1,...
	trunk	Trunk interface
	trunk-id	Trunk ID.
Defaults	N/A	
Command Modes	Privileged EXEC / User EXEC	
Usage Guidelines	N/A	
Examples	router# show mac-address-table Idx MAC Type VLAN Port ----- ------------------ ---------- ------ ---------- 1 01-00-5E-7F-FF-FA mcast(s) 1 1/1,1/2, 2 50-7B-9D-E1-82-5A ucast(l) 1 1/2, router# show mac-address-table aging-time MAC address aging time: 300 sec	
Error Messages	^Parse error	
	^Incomplete command	
Related Commands	mac-address-table aging-time	

5. Supplementary Information

Below table lists known issues or limitation related to CLI of Firmware v3.0

Item	CLI	Descriptions
S-1	(config)# interface trunk <trunk-id>	Limitation: Some sub-level commands are not designed for a trunk port but still listed. An error message "% This setting cannot be applied on trunk port!" comes out to remind users the sub-level command is not applicable. Not applicable sub-level commands: • trunk-group • interface • speed-duplex • flowcontrol • media • dot1x • warning-notification • rate-limit • spanning-tree • ip • bridge
S-2	(config)# interface ethernet <mod-port> (config-if)# trunk-mode	TN router only supports static trunk mode. Therefore, there is no need to configure trunk-mode in this case.
S-3	(config)# package	This command is currently listed but reserved for future use.
S-4	# package uninstall <pkg-name>	This command is currently listed but reserved for future use.